Version 2

INVEST IN TIME

TRUCKS

FUEL HANDLING

SPECIAL TOOLS

FOR TRUCK, BUS AND TRAILER

WALLMEK
i Kungälv AB

The Original since 1978

INVEST IN TIME

After a few years on the road, water, dirt, salt and wear and tear can make even the smallest job a time consuming effort. With the correctly designed and functioning tool system, many hours can be saved everyday when working on vehicles.

Today's workshops want skilled and experienced technicians that don't get injured during their job. Ergonomics and working environment are the basic things that makes it possible to keep the best technicians in the shop, loving what they do. The shop will then increase in productivity and the skill level can rise every day.

The right tools is not a cost, it's the best investment in the technician's potential to get the job done quicker and safer.
The expensive tool is the one that doesn't get the job done at all or break due to bad quality when you need it the most.

Watch out for lookalike copies, it says Wallmek on the original tool. These copy companies often use different colours and can claim it's the same tools, it's not even close to being the same!

WALLMEK i Kungälv AB

Company profile:

Wallmek i Kungälv AB started 1978, designing and producing special tools for auto repairs. Wallmek goes all the way from idea and design to production and distribution of a high quality product to our customers.

Today, Wallmek develop and produce special tools directly to passenger car and commercial vehicles producers (OEM) and to auto shops on the aftermarket. We are really good when it comes to hydraulic tools and solution that will do the job directly on the vehicle. Also, drainage equipment to ensure safety when doing fuel tank jobs in auto shops or draining complete vehicles at the scrapyard.

As the company grows, more and more tools and solutions are put on the market thanks to our close contact with You (our customers). In short terms – We develop Wallmek in direction of the products and solutions we are good at.

Our mission:

To develop, produce and offer cost efficient quality tools to our customers.

Important for Us:

Quality, Design, and Customer care.

Welcome to Wallmek i Kungälv AB

Yours sincerely,
Niklas Wallman CEO Wallmek i Kungälv AB

Follow us on Facebook and Instagram!
Get News, tips and ideas first!

Labourtime

Position on vehicle

QR code to demovideo

Lloyd's Register

Current issue date: 2 October 2021
Expiry date: 1 October 2024
Certificate identity number: 10387337

Original approval(s): ISO 9001 - 2 October 2012

Certificate of Approval

This is to certify that the Management System of:

Wallmek i Kungälv AB

Bultgatan 18, 442 40 Kungälv, Sweden

has been approved by Lloyd's Register to the following standards:

ISO 9001:2015

Approval number(s): ISO 9001 – 00002027

The scope of this approval is applicable to:

Development, design, production and sales of special tools for vehicles repairs.

Paul Graaf
Chief Operating Officer, Management Systems, MSIS
Issued by: LRQA Sverige AB
for and on behalf of: Lloyd's Register Quality Assurance Limited

UKAS

Lloyd's Register Group Limited, its affiliates and subsidiaries, including Lloyd's Register Quality Assurance Limited (LRQA), and their respective officers, employees or agents are, individually and collectively, referred to in this clause as 'Lloyd's Register'. Lloyd's Register assumes no responsibility and shall not be liable to any person for any loss, damage or expense caused by reliance on the information or advice in this document or howsoever provided, unless that person has signed a contract with the relevant Lloyd's Register entity for the provision of this information or advice and in that case any responsibility or liability is exclusively on the terms and conditions set out in that contract. Issued by: LRQA Sverige AB, Göteborgsvägen 74, 43363 Sävedalen, Sweden for and on behalf of: Lloyd's Register Quality Assurance Limited, 1 Trinity Park, Bickenhill Lane, Birmingham B37 7ES, United Kingdom

Page 1 of 1

The information "patent pending", regarding patent applications for certain products in this brochure, only concerns the patent application Nos. (and markets covered by that patent application) explicitly stated in the immediate connection with patent pending indication.

With reservation for possible adjustments due to events that are out of our control, for printing errors and changes in design.

20220504111

WALLMEK
i Kungälv AB

03-00042 Wheel Popper

Wheel/Rim Puller for Heavy Duty truck, Bus and Trailer 22,5", 19,5" and 17,5" rim size.

Patent pending

03-00042-030
Rim size 22,5"

The rim is loose in just minutes
- Mount the ring
- Mount the bar
- Mount hooks and chain
- Pull off with an impact gun

- The Rim Popper is designed for maximum efficiency and safety when pulling off seized wheels/rims.
- In just minutes the rim is pulled loose, quick and easy with very little effort by the user.
- Simple, quick, safe and problem free demounting of the rim.
- The three press rings cover truck, buss and trailer rims with the following sizes: 22,5", 19,5" and 17,5".
- There is also a set for just 22,5'' rims, article nr: 03-00042-030.
- By utlilising two strong bolts, one after the other, rims can be pried off with a 1/2'' impact gun.

The four rim hooks are designed to fit in almost any rim ventilation hole and cope with the power needed to get the job done. The set comes in a sturdy foam that can also be fitted in our tool trolley 04-00022.
This tool is a real time and effort saver for all shops that encounter stuck and seized wheels on trucks, busses or trailers. Old fashion methods can be devastating for the staff, wheels and also the productivity in the shop. No more hard physical work with sledge hammer, prybar or heating!

I just want to say that the rim popper for HD truck/trailer and bus are super-efficient….
Patrik Larsson, Grönnäs Autoservice Sweden

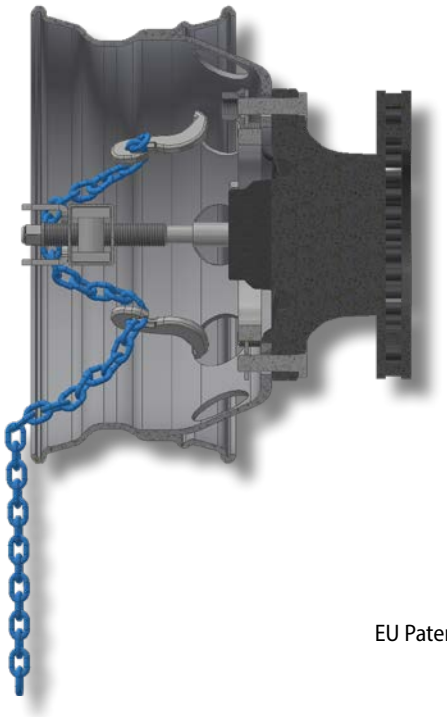

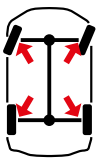

EU Patent pending No. 21160494.7

03-00042 - Contains these parts:

1. 03-00042-104 - Rim ring 19,5"
2. 03-00042-105 - Rim ring 22,5"
3. 03-00042-103 - Adaptor plate 17,5"
4. 03-00042-100 - Puller beam
5. 03-00042-130 - Press rod M30 complete (2x)
6. 03-00042-034 - Bracket
7. 03-00042-110 - Rim hook (4x)
8. 03-00042-107 - Chain, Class 10 Ø8mm L=1m (2x)
9. 03-00042-041 - Protection plate left
10. 03-00042-040 - Protection plate right
11. 09-874-3010 - CRC Longterm grease
12. 03-00042-044 - Extender ½" L=250mm

03-00042-030 - Contains these parts:

1. 03-00042-105 - Rim ring 22,5"
2. Not included
3. Not included
4. 03-00042-100 - Puller beam
5. 03-00042-130 - Press rod M30 complete (2x)
6. 03-00042-034 - Bracket
7. 03-00042-110 - Rim hook (4x)
8. 03-00042-107 - Chain, Class 10 Ø8mm L=1m (2x)
9. 03-00042-041 - Protection plate left
10. 03-00042-040 - Protection plate right
11. 09-874-3010 - CRC Longterm grease
12. 03-00042-044 - Extender ½" L=250mm

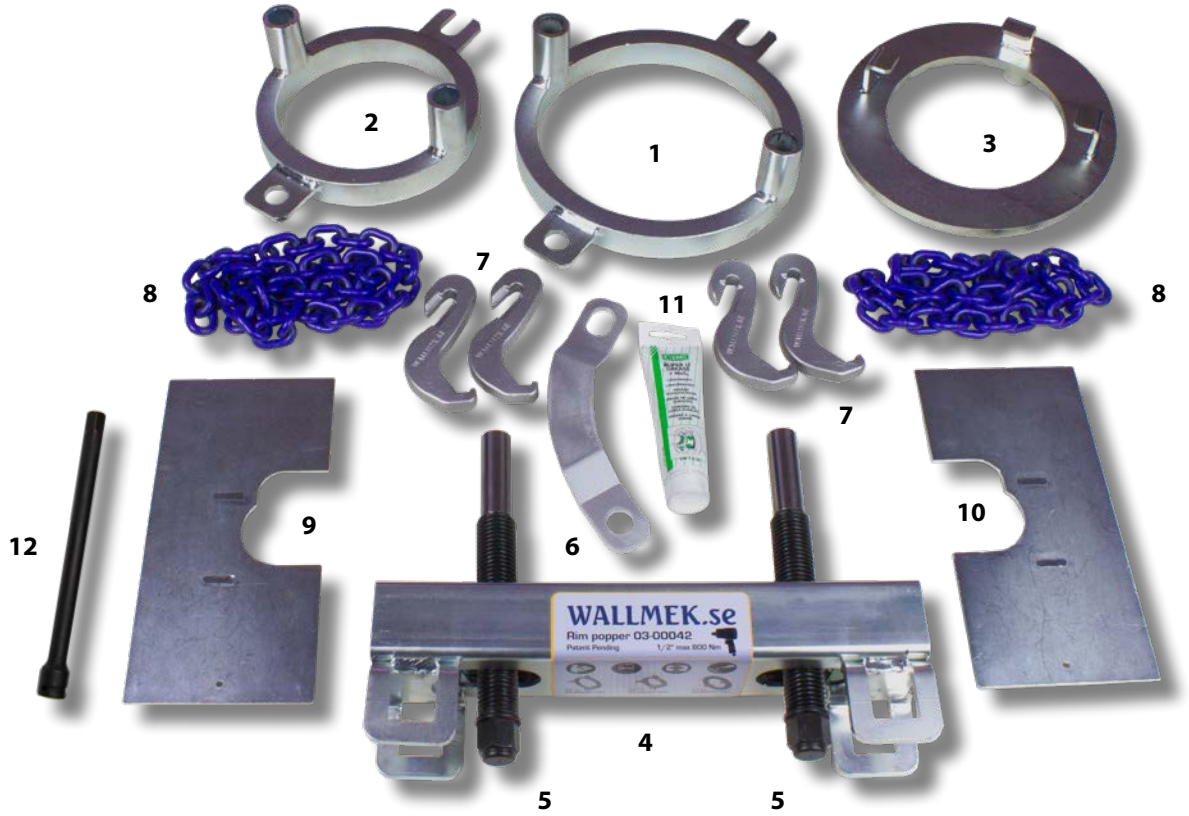

WALLMEK
i Kungälv AB

The comprehensive tool system for maximized profitability and function in the workshop. 32 - 45 tonnes.

Cylinder 32T

03-00028
page 26

Cylinder 45T

03-00026
page 26

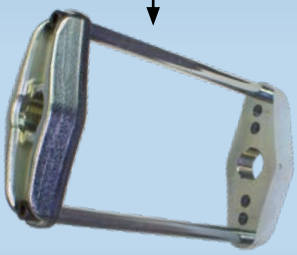

Kingpin

03-00031-32T/45T
page 8

03-00031-200
page 10

03-00031-220
page 9

03-00031-300
page 9

03-00006-022
page 9

03-00006-023
page 9

03-00006-024
page 9

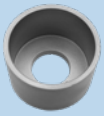

03-00006-024
page 10

Bushings

03-00037
page 18

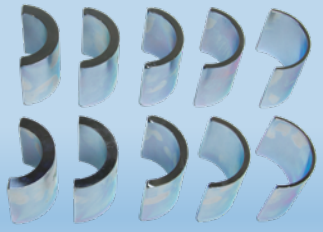

03-00038
page 19

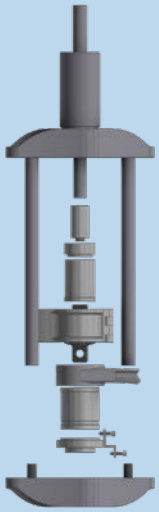

Nav etc.

03-00016
page 12

03-00006-025
page 12

03-00022
page 13

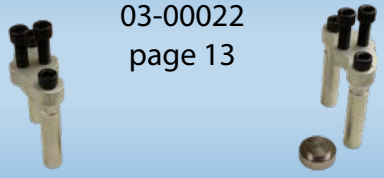

03-00027
page 13

03-00020
page 21

03-00008
page 15

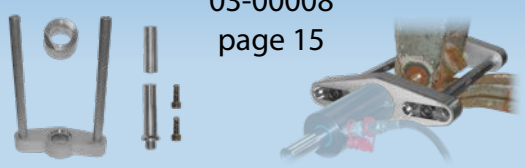

Add the right power and extended functions to your system

Cylinder 8,5T

03-00015
page 27

03-00014-001
page 17

03-00005-001
page 17

03-00023
page 25

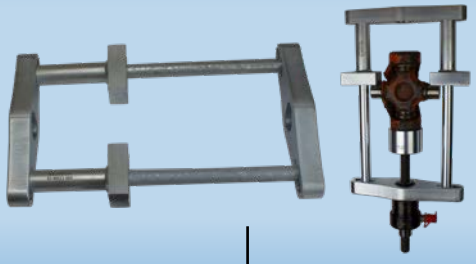

03-00023-050
page 25

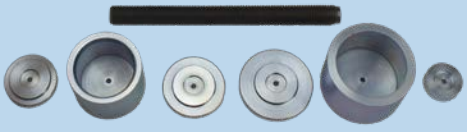

Cylinder 18T

01-00030
page 27

Cylinder 22T

1090-02-WAL
page 26

03-00035
page 22

03-00036
page 23

01-00003
page 24

WALLMEK
i Kungälv AB

03-00031-32T/45T Universal set for Kingpin

This set is designed to cover most Kingpins on the market, also the conical types. It's used with 32/45 ton hydraulic cylinder designed with punching capability. This function makes it possible to hammer on the cylinder (with punch adaptor fitted) during maximum pressure. The combination of high pressure and vibrations are very efficient and often crucial for a successful result.
With this tool, heating or heavy lifting in the shop press is no longer needed. The compact design makes it possible to do the job on busses where the access normally is limited.
The set is used with the brand specific sets add on kits that also are available.

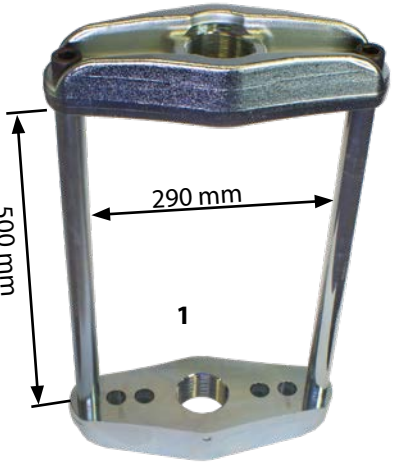

EU Protected Design - RCD No. 003068006-0001/-0002

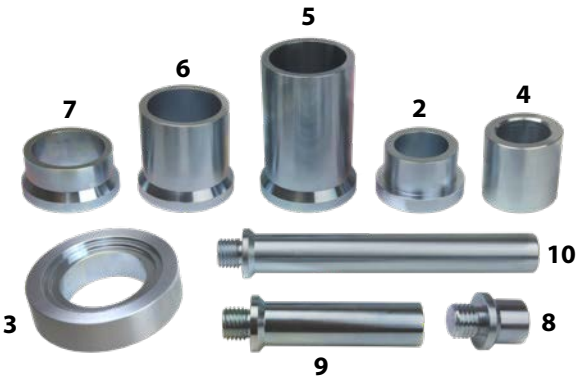

Parts in the set 03-00031-32T:

32T

1. 03-00031-001 Press block
2. 03-00006-027 Press pipe
3. 03-00006-028 Adaptor plate
4. 03-00006-030 Press socket
5. 03-00006-006 Press pipe 130 mm
6. 03-00006-029 Press pipe 85 mm
7. 03-00006-007 Press pipe 42 mm
8. 03-00006-020 Press axle L=30 mm Ø31mm
9. 03-00006-002 Press axle L=120 mm Ø31 mm
10. 03-00006-001 Press axle L=230 mm Ø31 mm

Parts in the set 03-00031-45T:

45T

1. 03-00031-001 Press block
2. 03-00006-027 Press pipe
3. 03-00006-028 Adaptor plate
4. 03-00006-030 Press socket
5. 03-00006-006 Press pipe 130 mm
6. 03-00006-029 Press pipe 85 mm
7. 03-00006-007 Press pipe 42 mm
8. 03-00032-001 Press axle M30, L=30, Ø38 mm
9. 03-00032-002 Press axle M30, L=140, Ø38 mm
10. 03-00032-003 Press axle L=50, Ø38 mm
11. 03-00032-004 Press axle L=70, Ø38 mm
12. 03-00032-005 Press axle L=100, Ø38 mm

"Without this equipment for kingpins, we normally spend 2 – 3 days doing this job.
The universal design makes it possible to do even other jobs more efficient."
Per Klasson
Fristads Expressbyrå, Sweden

03-00031-050 Fixing plate for 03-00031-32T/45T

Usefull add-on to lock the press tubes on to the press frame for easier handling. A really good function when doing jobs on caterpillar tracks, spring bolts and also kingpins.

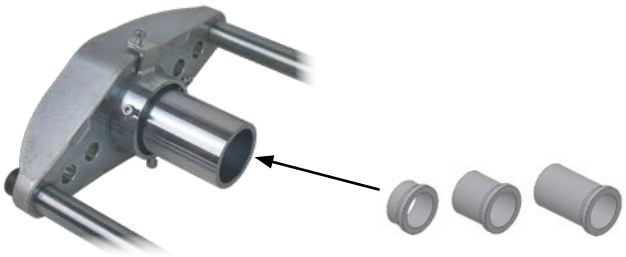

03-00031-220 Add on set for Mercedes Actros and Atego king-pin

The set are used with 03-00031-32T or 45T (45T recommended).

With the set it's possible to dismount and mount the king-pin directly on the truck axle.

Contains these parts:

1. 03-00032-101 - Press axle M30. L=137 mm. Ø 29 mm
2. 03-00031-221 - Guide socket
3. 03-00006-022 - Dismounting collar Volvo Kingpin
4. 03-00031-204 - Extender
5. 03-00031-203 - Extender
6. 03-00031-303 - Guide socket

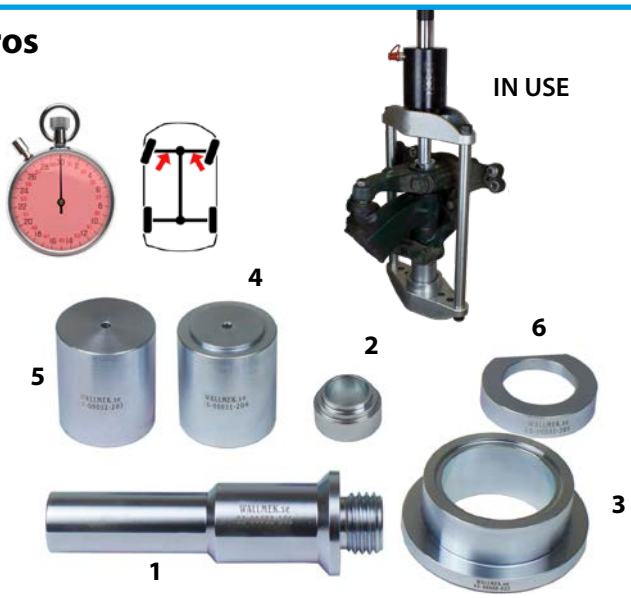

03-00031-300 Add on set for MAN TGA, TGX and TGS king-pin

The set are used with 03-00031-32T or 45T (45T recommended).

With the set it's possible to dismount and mount the king-pin directly on the truck axle.

Contains these parts:

1. 03-00031-302 – Press pipe
2. 03-00031-303 - Guide ring
3. 03-00031-203 - Extender
4. 03-00031-204 (x2) - Extender

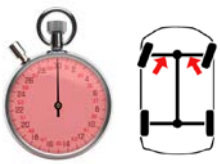

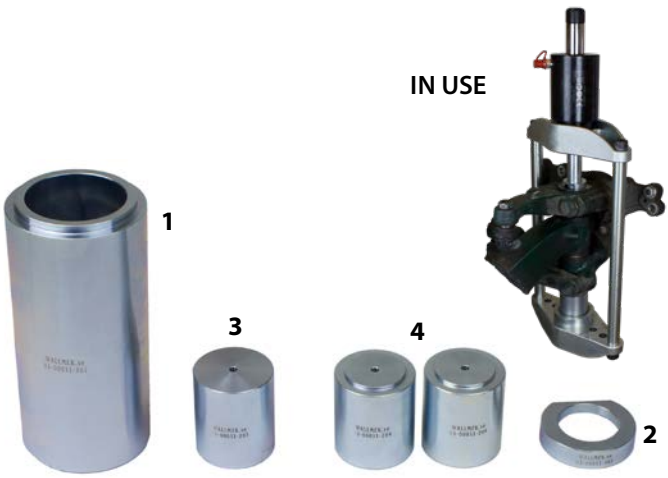

03-00006-022 Press ring collar Volvo Kingpin

Is used with universal set 03-00031 for fitting the lower bearing on Volvo kingpins with locknuts underneath.

03-00006-023 Mounting plate Volvo Kingpin

Is used with universal set 03-00031 for pressing in Volvo kingpins with locknuts underneath. The plate guides the kingpin into position when pressing/mounting.

03-00006-024 Press socket Scania Kingpin

Is used with universal set 03-00031 for pressing out Scania conical kingpins.

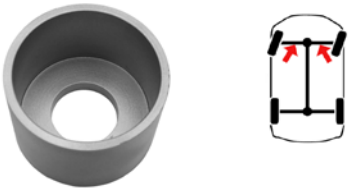

03-00006-031 Demounting tube Kingpin in ZF axle on buses, MB, Setra etc.

NEW

Demounting tube with opening for the shock absorber bracket on top of the kingpin position.

The slot in the tube is needed to get access when pressing out the kingpin. After some years on the road this type of king pin will get seized, requiring very high press force when being pressed out. The press tube is designed for pressing up to 45 T (157 Ton with hammer function).

To be used with universal kingpin set 03-00031-32T/45T.

IN USE

03-00031-200 Add on set for BPW and SAF kingpin

The set are used with 03-00031-32T or 45T (45T recommended).

With the set it's possible to dismantle and fit the king-pin directly on the trailer axle.

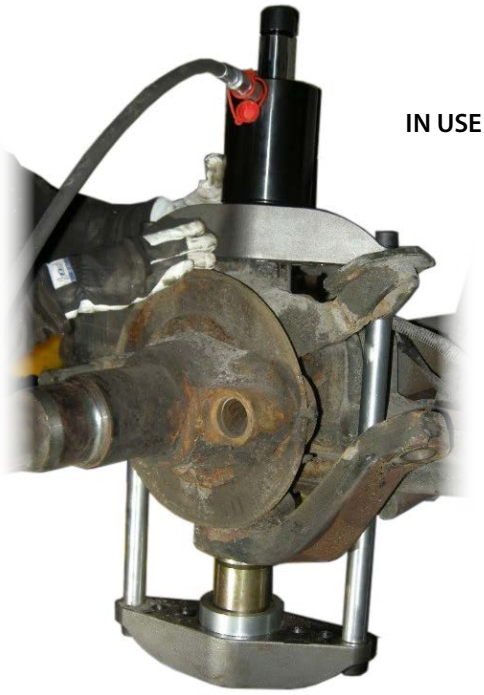

IN USE

Contains these parts:

1. 2 pcs 03-00031-201 - Support rod (595 mm)
2. 03-00031-202 - Extender
3. 03-00031-203 - Extender
4. 3 pcs 03-00031-204 - Extender
5. 03-00031-205 - Press plate
6. 03-00031-206 - Press plate

1

The Wallmek tools are frequently used in our shop, we get great help every time we use them. We save a lot of time and effort with these tools, the support and service are very good every time we contact Wallmek.
Stefan Lundgren
Volvo Truck Center Helsingborg
Sweden

WALLMEK - The original since 1978

Innovative high-quality tools will help improve your business, *copies will not.*

Behind all innovative tools are hundreds of hours with testing and development. This way ideas come to life, to make the job easier and maximise your productivity.

We need to patent and protect our products to help your business grow even when others try to look like us. Thank you for pointing out destructive, dangerous copies and copy companies in our normally innovative tool community.

By choosing products from copy companies you also reduce your own shops safety and productivity in the long run. Quality and safety are the most important in a tool, bad tools will not payoff before breaking down.

03-00016-32T/03-00016-45T
Bolt patern 8/275, 10/335

This tool is flexible and fits heavy trucks/buses and trailers with 8 bolt Ø 275 mm and 10 bolt Ø 335 mm. Choose set depending on the cylinder size in use. The plate with a 2½" thread can also be used as a part in the press block 03-00031-001.

EU Protected Design - RCD No. 003068006-0001/-0002

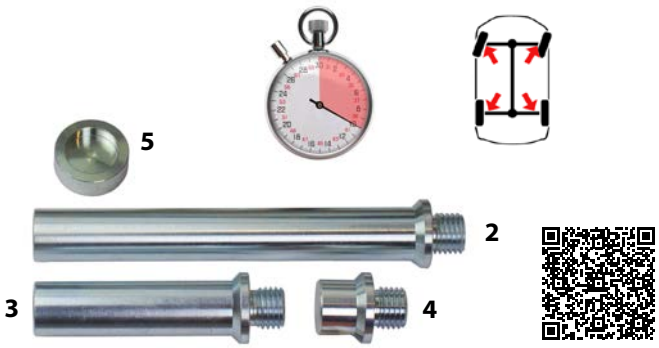

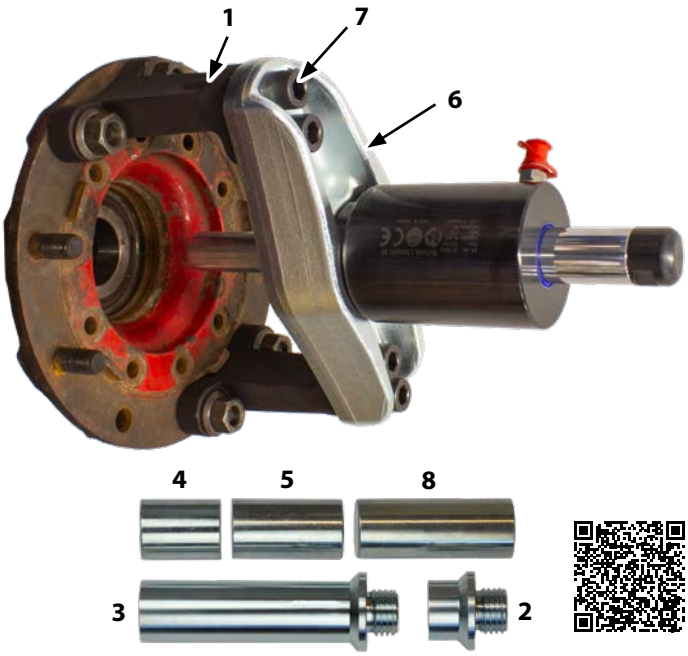

03-00016-32T The tool is used with 32 tons hydraulic cylinder 1090-05/03-00028. The robust design even allows punching with a hammer on the cylinder during max pressure. This function makes it possible to press out hubs also with unit wheel bearings from straight axles.

Contains these parts:
1. 2 pc 03-00016-001 – Press foot for hub puller
2. 03-00006-001 – Press axle 250 mm Ø31mm
3. 03-00006-002 – Press axle 140 mm Ø31mm
4. 03-00006-020 – Press axle 50 mm Ø31mm
5. 03-00006-021 – Press plate
6. 03-00031-002 – Plate with thread
7. 4 pc 03-00003-005 – Screw M22×60 12.9, hex socket

03-00016-45T The tool is used with 45 tons hydraulic cylinder 03-00026. The robust design even allows punching with a hammer on the cylinder during max pressure. This function makes it possible to press out hubs also with unit wheel bearings from straight axles.

Contains these parts:
1. 2 pc 03-00016-001 – Press foot for hub puller
2. 03-00032-001 – Press axle 30mm Ø38mm
3. 03-00032-002 – Press axle 140 mm Ø38mm
4. 03-00032-003 – Extender 50 mm Ø38mm
5. 03-00032-004 – Extender 70 mm Ø38mm
6. 03-00031-002 – Plate with thread
7. 4 pc 03-00003-005 – Screw M22×60 12.9, Hex socket
8. 03-00032-005 – Extender 100 mm Ø38mm

Once you start using these tools and methods you will understand how insufficient you are without them. The tools are also easy to put in the service van when we head out on road jobs. Our shop/garage adding all new tools from Wallmek, this save us a lot of time and the technicians are really satisfied.
Thomas Karlsson
Nimrod i Eslöv, Sweden

03-00006-025 Extender for hub puller

For use with hub puller 03-00016-32T/-45T on axels with hub reduction/gear inside the hub (4 pcs needed). M22, 50 mm. For example Scania.

03-00022 Hub puller for 17,5" rims, low loader trailers with 10/225 hubs

Extension set to 03-00016 for removal of 225 mm hubs and 10 bolts, hydraulic cylinder 03-00028 (32 ton) and 03-00026 (45 ton) is used with the set. The heavy-duty design supports a full 45 ton pressure and hammer strokes in the direction of pressure (on the cylinder) during removal. This makes it possible to remove hubs with unit bearings on straight axles.

Contains these parts:
1. 2 x 03-00022-001 - Plate
2. 4 x 03-00022-002 - Arm
3. 03-00022-003 - Thrust washer SAF Ø 73 mm
4. 8 x 03-00003-005 - Screws M22x60 12.9.

03-00031-002 Plate with thread for press block (not included)
Included in universal set 03-00031-32T/45T.

EU Protected Design - RCD No. 003068006-0001/-0002

IN USE

03-00016-011 Press plate SAF 110/88 mm

The press plate is designed for hollow wheel axles and are used when pressing hub/bearing off the axle with hub puller set 03-00016. The plate is designed to fit the accessible surfaces and also withstand the power needed for dismounting the hub from the axle.

03-00027-32T / 03-00027-45T Puller set with pressure rod for hubs without wheel bolts

The set makes it possible to efficiently remove rusted bearings with external hubs from straight axles. Developed for Volvo FL, MAN TGA, TGS, TGX, Mercedes Atego, Actros, Renault Kerax, Magnum, Midlum and Premium, fits also other brands with the same bolt dia. The set is used with hydraulic cylinder 03-00028 (32 ton) or 03-00026 (45 ton).

Contains these parts:

03-00027-32T
1. 03-00027-010 - Plate
2. 03-00027-012 - Adaptor M82x2–G2 ½"–11
3. 03-00027-002 (M24) - Press rod

03-00027-45T
1. 03-00027-010 - Plate
2. 03-00027-012 - Threaded pipe
4. 03-00027-003 (M30) - Press rod

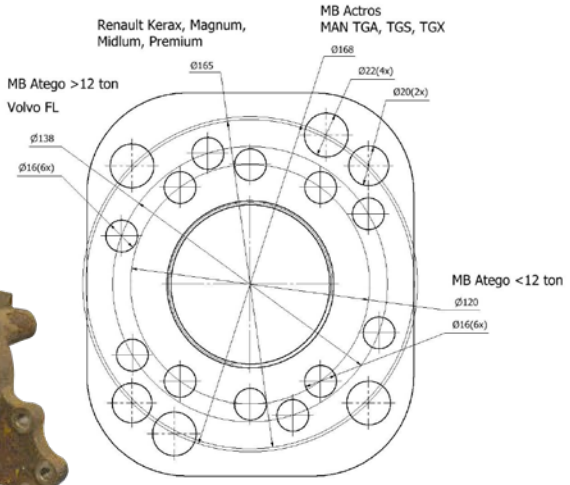

32 T

45 T

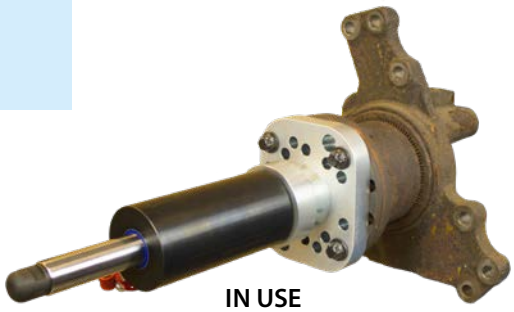

IN USE

03-00025 Dismantling set, Volvo/Renault/DAF floating brake disc

A brand new tool that really helps when Volvo's floating brake disc needs to be removed. The brake disk is pressed out one cylinder at a time. This is very efficient and saves a great deal of time in the workshop. Using extreme pressure int the workshop press on sensitive metal parts or cutting the brake disc are both noisy and dangerous. This hydraulic cylinder does the same job in a controlled manner safely and easily.

The tool consists of two special cylinders and a control valve for crosswise pressing. Pressing out the disc in this way only takes a few minutes. Used with 1030 and 1036.

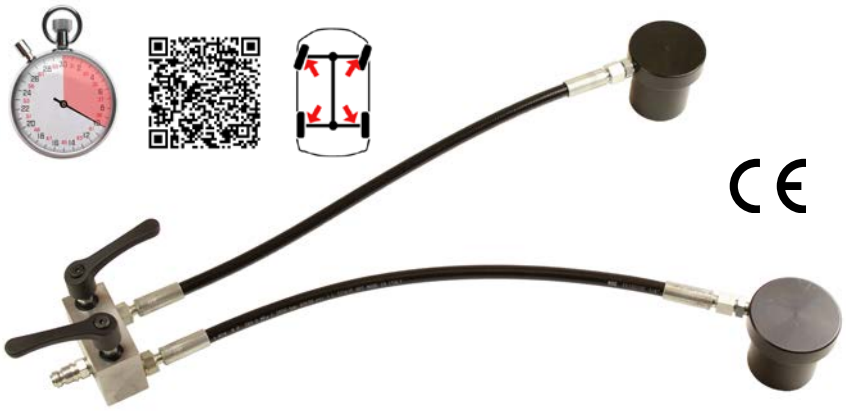

MAX 40 Ton

IN USE

"A fantastic tool that we couldn't be without. No more heavy jobs in the shop press or time-consuming cutting in the thick brake disc. These things ruin the work environment for everyone."
- Ahmad Hassan
Volvo Truck Center Arlöv
Sweden

03-00034 Hydraulic cylinder 14 ton with hose and coupling

The compact cylinder makes it possible to separate parts also in tight spaces where normal cylinders won't fit.
This type of job is done in any automotive garage, industry or maintanence shop.

Contains these parts:
1. 03-00019 - Hydraulic press cylinder 14T
2. 03-00019-010 - Hose 0,5 m
3. Res 4306 - Cejn quick-coupling hydraulic male 1/4"

Max pressure	700 bar	Stroke	41 mm
Force	14 ton	Hose length	0,5 m
Weight	2,3 kg		

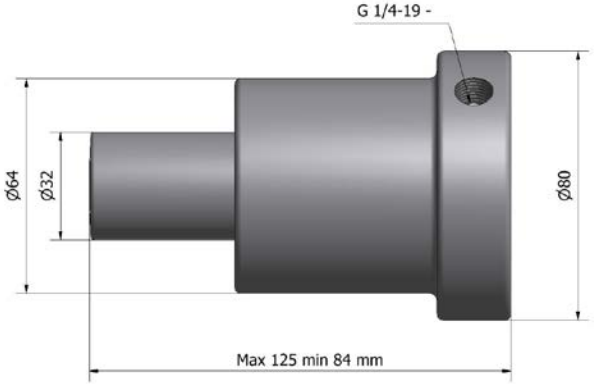

03-00008-32T / 03-00008-45T Spring bolt set (Scania)

A tool set for quick dismounting of the spring bushing bolts. The job is done directly on the truck with a minimum of part dismounting.

The set is used with the threaded plate 03-00031-002 from the press block 03-00003-001 (none of these are included), also designed for punching. The combination of the high pressure and vibrations are very efficient and often crucial for a successful result when pressing out the rusted bolt.

The set is used with hydraulic cylinder 03-00028 (32 ton) or 03-00026 (45 ton).

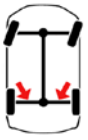

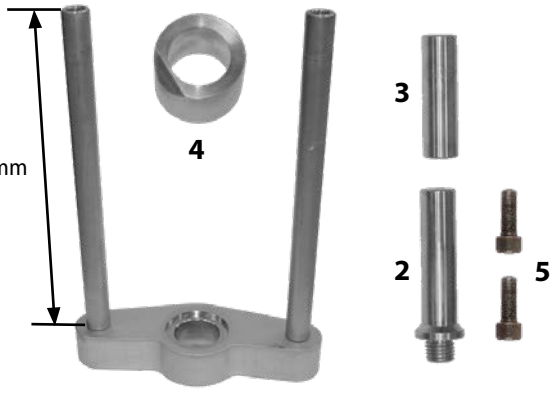

32 T

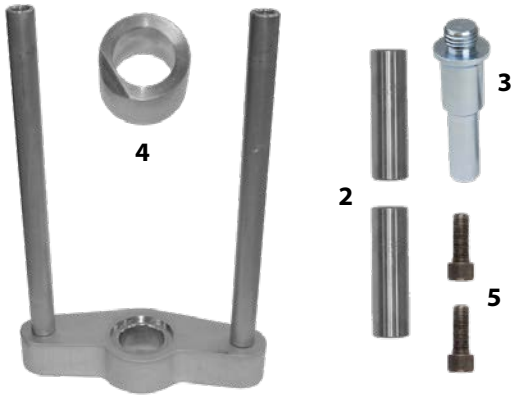

45 T

Contains these parts:
03-00008-32T

1. 03-00004-001 - Press block
1a. 03-00004-002 - Plate without thread
1b. 2 pcs 03-00004-003 - Support rod
1c. 2 pcs 03-00003-005 - Screw M22x60 12.9 hex
2. 03-00006-009 - Press axle 115 mm Ø29 m
3. 03-00006-010 - Press axle 100 mm Ø29 mm
4. 03-00006-011 - Press pipe 60 mm Ø54 mm
5. 2 pcs 03-00003-005 - Screw M22x60 12.9 hex

Contains these parts:
03-00008-45T

1. 03-00004-001 - Press block
1a. 03-00004-002 - Plate without thread
1b. 2 pcs 03-00004-003 - Support rod
1c. 2 pcs 03-00003-005 - Screw M22x60 12.9 hex
2. 2 pcs 03-00032-102 - Press axle L=64 mm. Ø=29 mm
3. 03-00032-101 - Press axle M30. L=137 mm. Ø 29 mm
4. 03-00006-011 - Press pipe 60 mm Ø54 mm
5. 2 pcs 03-00003-005 - Screw M22x60 12.9 hex

03-00031-002 Plate with thread for press block (not included)

Included in universal set 03-000031-32T/45T.

EU Protected Design - RCD No. 003068006-0001/-0002

IN USE

03-00040-001 Adaptor M22 – M30x3,5

The adaptor makes it possible to pull out M30 bushing bolts with the 32 Ton cylinder 03-00028. An appropriate press pipe is used in combination with the adaptor when pulling.

03-00040-002 Adaptor M22 – M27x3

The adaptor makes it possible to pull out M27 bushing bolts with the 32 Ton cylinder 03-00028. An appropriate press pipe is used in combination with the adaptor when pulling.

03-00040-003 Adaptor M22 – M24x2

The adaptor makes it possible to pull out M24 bushing bolts with the 32 Ton cylinder 03-00028. An appropriate press pipe is used in combination with the adaptor when pulling.

03-00040-004 Adaptor M22 – M24x3

The adaptor makes it possible to pull out M24 bushing bolts with the 32 Ton cylinder 03-00028. An appropriate press pipe is used in combination with the adaptor when pulling.

M22

04-00028 Hydraulic ball-joint puller, 8,8 ton

New and unique design that efficiently presses out the ball joints and brake/slack adjuster on trucks, busses and trailers. Also wheel bolts are dismantled and fitted very smoothly thanks to the flexible design (see pictures below).

The press tools can be rotated for different ground heights, the two supplied distance rings provide the adjustment options required for these jobs. The anvil tool has an opening of 42 alt 57 mm depending on what side is chosen. In addition, the two tools can change position on the cylinder for superior access in tight spaces inside the wheelhouse, around sway bars or hidden steering joints on buses, etc.

The hydraulic cylinder presses up to 8.8 tonnes for easy, safe and smooth removal. A safety belt is supplied with the tool to prevent the tool from falling down during work.

Used with 700 bars of hydraulic pump 1030, or 1036.

EU Patent No. EP 3424644
US Patent No. US 10.807.222

Contains these parts:

1. 04-00028-021 – Press tool
2. 04-00028-022 – Anvil tool
3. 04-00028-019 – Distance ring 16 mm
4. 04-00028-020 – Distance ring 26 mm
5. 04-00028-011 – Safety strap
6. RES4306 – Hydraulic quick -coupling male 1/8”

"The tools from Wallmek are world class solutions, the same with the support we get.
Our staff are using the tools every day and they always work as promised. When we need new tools or maintain existing equipment, we always get quick help and service.
Why do things slow when it can be done so much faster?"
- Ahmad Hassan
Volvo Truck Center Arlöv
Sweden

Dismounting wheel bolts

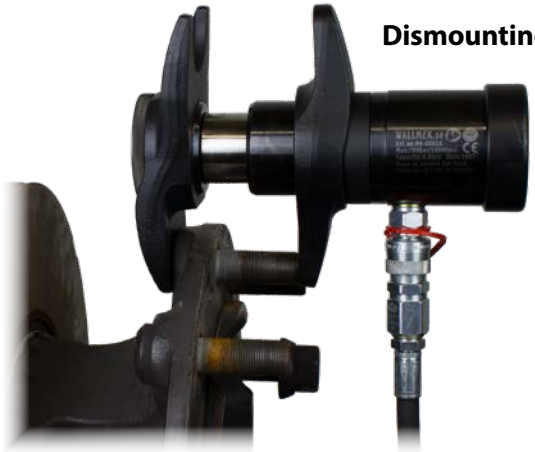

Mounting wheel bolts

03-00030 Hydraulic ball joint puller

Press clamp for dismounting steering joints on trucks/buses and ball-joints on light commercial vehicles. See also 04-00028.

This clamp is specially designed to fit most steering axles and ball-joints on light commercial vehicles, heavy trucks and buses on the market.

Contains these parts:
1. 03-00014-001 – Steering joint puller
2. 03-00015 – Hydraulic cylinder 8,5 ton

03-00014-001
Can be bought seperately

03-00005-001 Automatic brake adjuster puller/steering joint on trailers

Used for pressing out rusted and seized axles from the brake adjuster. Fits most types on the market from Haldex and BPW. See also 04-00028.
The tool is used with a 8,5 ton hydraulic cylinder 03-00015 (not included).
The design allows good access even in tight spaces on the vehicle.

04-00030 Air hammer for tie rod ends

This air hammer is developed for efficient work on tie rod ends on trucks and buses, either for replacing or only making adjustments. Vibrations in combination with rust dissolving liquid make the threads adjustable again.

This version is reinforced and improved for daily use in shop environment. 3000 rpm, vibration dampened handle and bracket for better ergonomics.

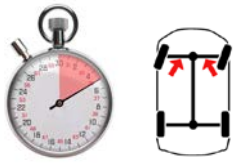

NEW VERSION

04-00031 Fixed wrench 34 mm

Powerful and slip free wrench for tie rod ends with 34 mm 6 point grip. The wrench is used in combination with the air hammer 04-00030 for adjusting or replacing the tie rod ends on truck and buses.

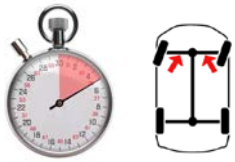

Bushings

03-00037 Mounting tool for slotted bushing

The clamp in this set is used in combination with the different adaptors for compressing slotted bushings on trucks and buses. A vise is used to easily compress the bushing, a lock pin are then tapped in and locks the clamp during mounting of the bushing. No fragile bolts or threads to be used with this system!
The set fits the following sizes; 95 mm, 85 mm, 80 mm, 75 mm, 70 mm and 65 mm.

This set is used with bushing set 03-00038 that includes demount and mounting plates and pipes in proper dimensions.

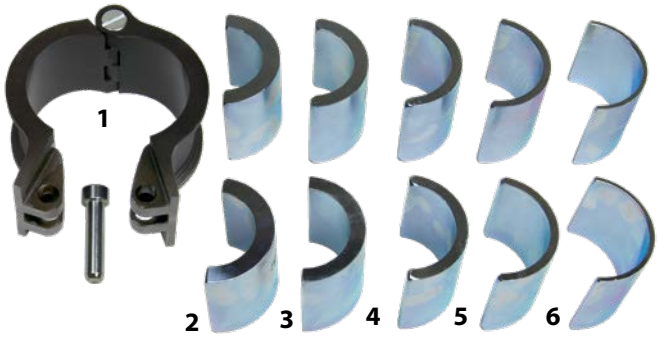

Contains these parts:

1. 03-00037-001 Clamp Ø95 mm
2. 2 pcs 03-00037-011 - Adaptor Ø65 mm
3. 2 pcs 03-00037-012 - Adaptor Ø70 mm
4. 2 pcs 03-00037-013 - Adaptor Ø75 mm
5. 2 pcs 03-00037-014 - Adaptor Ø80 mm
6. 2 pcs 03-00037-015 - Adaptor Ø85 mm

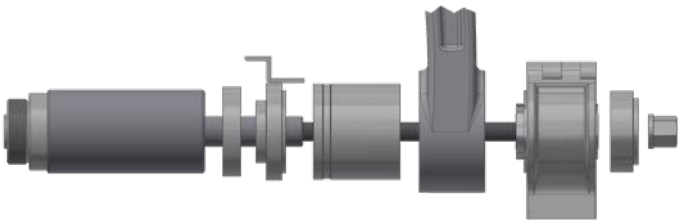

IN USE

03-00037-209 Adaptor set Ø60 mm bushing

A set with two adaptor halves 03-00037-009 for compressing 60 mm truck bushings. Is used with the clamp in set 03-00037.

03-00038 Bushing set with fixing plate

The combination of sizes on the press pipes and press plates makes the set very useful on commercial vehicles, either directly on the chassis or in the shop press.
The fixing plate in the set makes it possible to fix the press pipes to the bottom of the press block.
This makes the job easier, less parts needs to be centered in positon by hand during mounting or demounting.

The set can be complemented with 03-00037 to get a complete solution for slotted bushings.

The set can be used with the press block 03-00031-001 or a 32 tons hydraulic cylinder 03-00028. Adaptor for the cylinder are included in the set.

Contains these parts:

1. 03-00038-028 - Press pipe, A 110mm, B107mm, C96mm, D100mm
2. 03-00038-027 - Press pipe, A 93,5mm, B 91,5mm, C 88,5mm, D100mm
3. 03-00038-026 - Press pipe, A 89,5mm, B 87mm, C 73mm, D 100mm
4. 03-00038-025 - Press pipe, A 84.5mm, B 82mm, C 72mm, D 100mm
5. 03-00038-024 - Press pipe, A 79,5mm, B 77mm, C 67mm, D 100mm
6. 03-00038-023 - Press pipe, A 74,5mm, B 72mm, C 62mm, D 100mm
7. 03-00038-022 - Press pipe, A 69,5mm, B 67mm, C 57mm, D 100mm
8. 03-00038-021 - Press pipe, A 64,5mm, B 62mm, C 52mm, D 100mm
9. 03-00038-011 - Press plate, A 64,5mm, B 52,5mm, C 51,2mm, D 32mm
10. 03-00038-012 - Press plate, A 69,5mm, B 57,5mm, C 56,2mm, D 32mm
11. 03-00038-013 - Press plate, A 74,5mm, B 62,5mm, C 61,2mm, D 32mm
12. 03-00038-014 - Press plate, A 79,5mm, B 67,5mm, C 66,2mm, D 32mm
13. 03-00038-015 - Press plate, A 84,5mm, B 72,5mm, C 71,2mm, D 32mm
14. 03-00038-016 - Press plate, A 89,5mm, B 77,5mm, C 72,2mm, D 32mm
15. 03-00038-017 - Press plate, A 93,5mm, B 81,5mm, C 76,7mm, D 32mm
16. 03-00038-001 - Press adaptor 30mm
17. 03-00038-002 - Press adaptor 86mm
18. 03-00038-003 - Cylinder adaptor (for 32 T)
19. 03-00038-004 - Fixing plate

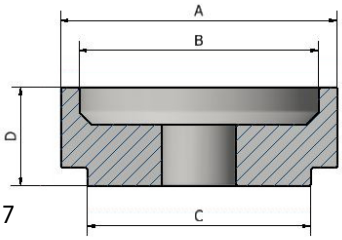

011-017

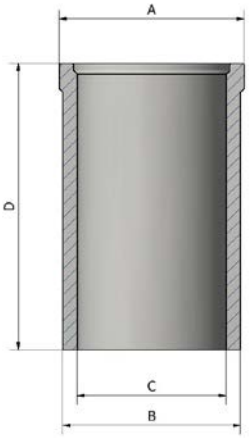

021-028

04-00025 Adjustable press block holder

The holder makes it possible to work at any angle with the press block 03-00031-001 with a cylinder mounted to it. A gearbox lift or similar with wide wheel base can be used for the holder. The inner diameter is 25 and 30 mm.

The many positions on the flange in combination with the swiveled head maximize the access under the vehicle.

The holder is developed to be used with bushing set 03-00037 and 03-00038.

Fit directly on the press block 03-00031-001.

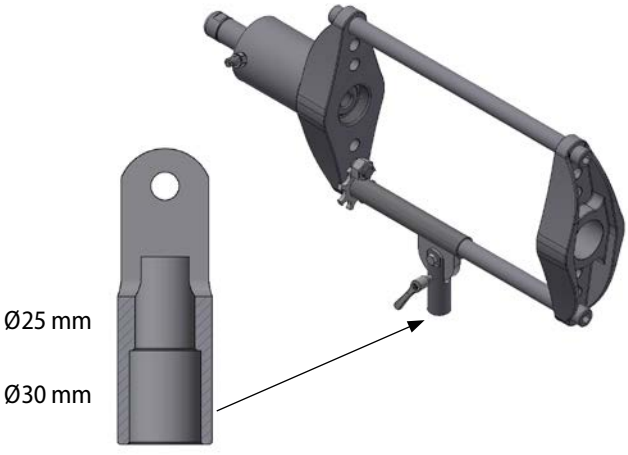

03-00009 Spring bushing set, universal

The spring and shackle bracket bushings (44–64 mm) are quickly and easily replaced. No heating or lifting in the shop press is needed when working with this set.

This set is used with the 32 ton cylinder 03-00028 (not included).

Contains these parts:
1. 03-00006-006 – Press pipe 130 mm
2. 03-00006-007 – Press pipe 42 mm
3. 03-00006-014 – Press plate Ø63 mm
4. 03-00006-015 – Press plate Ø50 mm
5. 03-00006-016 – Press plate Ø44 mm
6. 03-00006-017 – Press plate Ø63 mm
7. 03-00006-018 – Press plate Ø57 mm
8. RES4024 – Flange nut M18
9. RES4026 – Carriage beam M18/M22, 250 mm

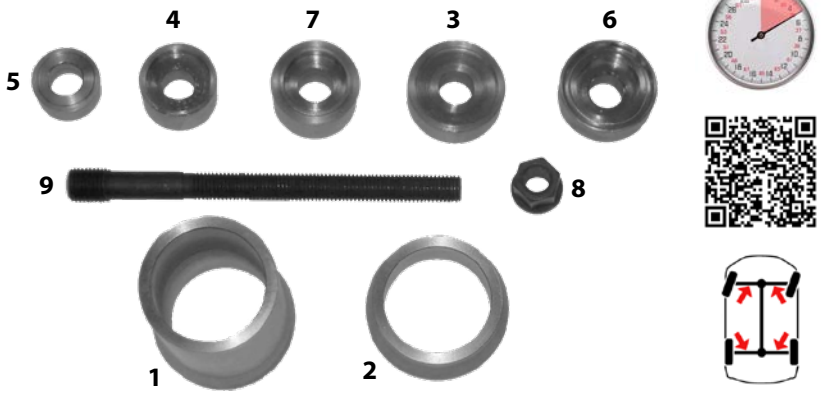

03-00010 Bushing set for VBG drawbars

This set is primarily designed for VBG bushings and drawbars but is also universal. The bushing is replaced using the 32 ton hydraulic cylinder 03-00028 (not included) with the unique punching function directly on the drawbar.
The bushing is replaced quickly without needing to heat the part.

Contains these parts:
1. 03-00006-006 – Press pipe 130 mm
2. 03-00006-007 – Press pipe 42 mm
3. 03-00006-013 – Press plate Ø59 mm

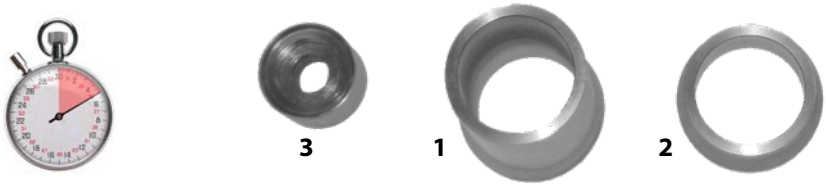

03-00013 Bushing set SAF-axle, 150 mm

A set for quick and easy replacement of the large 150 mm bushing in SAF, MB, Jost and ROR axles. The set is used with the 32 ton hydraulic cylinder 03-00028 (not included).

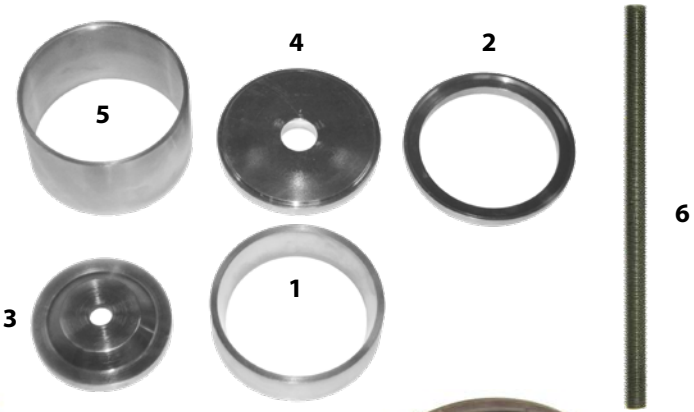

Contains these parts:
1. 03-00013-001 – Mounting ring 45 mm
2. 03-00013-002 – De/mounting ring 20 mm
3. 03-00013-003 – De/mounting plate
4. 1091-17-02 – Press plate
5. 1091-17-03 – Press pipe
6. RES4034 – Carriage beam M22, 500 mm

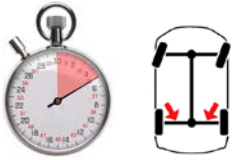

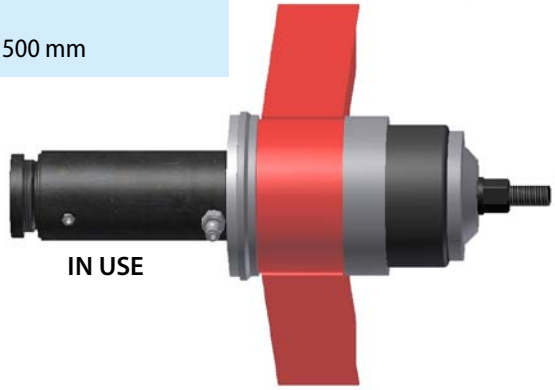

03-00006-012 Adaptor for VBG drawbar bolts

The adaptor is used with the Kingpin set 03-00031 for pressing out the bushing bolts on VBG drawbars (not hex bolts). The bolt is pressed out in a similar way as the kingpin but with the press frame in a horizontal position.

03-00017 Press block set for pulling out truck/trailer connectors with VBG 55 mm axle

With this set the complete pulling connector is pulled out from its holder when maintenance is needed. This solution saves a lot of time and efforts during dismounting. It is used with one of the following cylinders; 1090-02 or 01-00030.

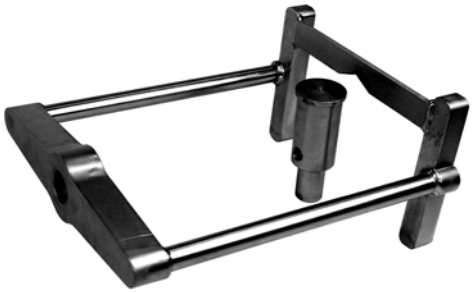

An efficient tool that not just makes it simple to do the job, it's also a lot more fun.
- Stefan Lundgren, Volvo Truck Center Helsingborg, Sweden

03-00020-32T / 03-00020-45T Wheel bearing set (Unit) Scania

With this set a wheel bearing is replaced quickly and easily directly at the vehicle, no need to go to the shop press. The set is used with hydraulic cylinder 03-00028 32T/45T or 03-00026 and hub puller set 03-00016-32T/45T. Parts for allowing hammer punching during max pressure are also included.

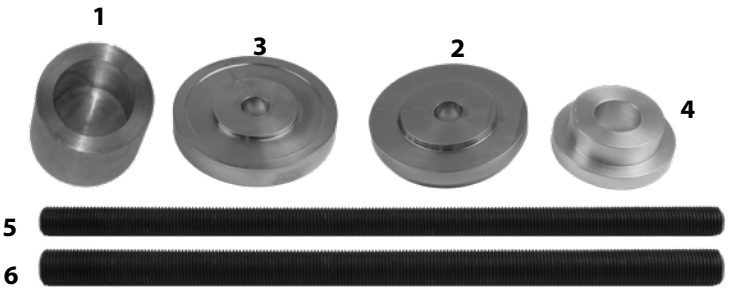

IN USE

Contains these parts:
03-00020-32T

1.	03-00006-026	Press socket 65 mm
2.	03-00020-001	Press plate Scania unitlager
3.	03-00020-002	Press plate Scania unitlager
4.	03-00020-003	Protection socket Scania unitlager
5.	RES4034	Carriage beam M22, 500 mm

Contains these parts:
03-00020-45T

1.	03-00006-026	Press socket 65 mm
2.	03-00020-001	Press plate Scania unitlager
3.	03-00020-002	Press plate Scania unitlager
4.	03-00020-003	Protection socket Scania unitlager
6.	RES4034	Carriage beam M27, 500 mm

01-00004 Lock ring tool

IN USE

A new type of lock ring tool which makes removing and refitting of wheel bearing lock rings very easy. The tool is designed to fit both passenger cars, light commercial vehicles and trucks. The adjusting screw has a ¼'' ratchet grip which provides enough power to easily remove stuck and rusted lock rings.

The grip angle between the tips will also always be correct no matter the size or position of the lock ring. This makes the tool safer, more effective and easier to use than ordinary pliers.

The tool is delivered with a total of 3 pairs specially designed tips that can easily be switched if needed.

6" for superior access.

NEW DESIGN!

Accessories:

01-00004-013	Circlip pin 2,5 mm, 4pcs
01-00004-014	Circlip pin 3 mm, 4pcs
01-00004-015	Circlip pin 3,5 mm, 4pcs

Driveline

03-00035 Universal puller for transmission flange on propeller shaft

Puller for transmission flanges on prop shafts and gearboxes.

When the propeller shaft bearing needs to be replaced the flange needs to be dismantled. It's used with an 18 tons hydraulic cylinder 01-00030 (not included). The entire job is completed on the vehicle without heavy lifting into a hydraulic shop press. The tool is designed for maximal adjustment and flexibility for fitting on any truck or bus axle flange. Gearboxes with retarder or other applications are also possible to fit with this tool due to its design.

Rec. cylinder 01-00030.

EU Protected Design - RCD No. 003477090-0001/0002
EU Patent No. EP3323553
US Patent No. US 10.532.450
US Design Patent No. US D850.226

Contains these parts:

1. 2 pcs 03-00035-001 - Press foot
2. 01-00041-002 - Fixing plate 1 ½" thread
3. 2 pcs 01-00041-003 - Sliding plate
4. 2 pcs 01-00018-004 - Screw
5. 4 pcs 01-00041-005 - Screw M14×45 10.9, hex
6. 03-00035-002 - Bolt set M12, hex. 4 pc
7. 03-00035-005 - Adjustable press rod M24

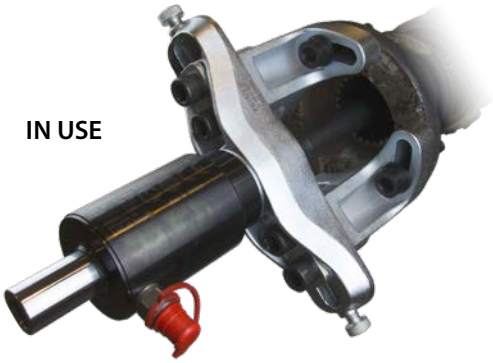

03-00035-201 Thread adaptor Scania M44×1,5 – M22×2,5

The adaptor makes mounting of the bearing and flange a simple operation. Use a M22 rod for mounting manually or with hydraulic cylinder.

03-00035-101 Press rod Volvo FL, M20

Protects the inner thread on the axle and makes dismounting of the flange easier.

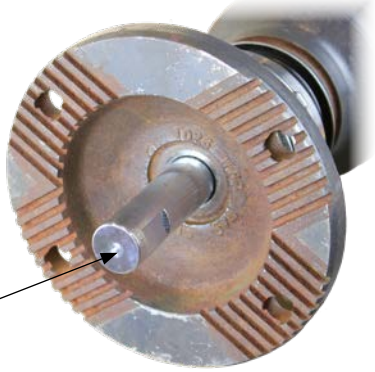

03-00036 Universal puller for prop axle/shaft bearing and pitman arm

Adjustable and universal to cover most propshaft bearings and pitman arms. Used with a 18 ton hydraulic cylinder 01-00030 (not included). The adjustable press feet are wedge shaped for better access.

After years on the road, exposed to dirt, water and salt, parts will eventually rust and seize. Standard or manual tools are normally not strong enough to do the job. With the help from the 18 ton hydraulic cylinder with hammer function the job is made easy with a minimum of wear. Heavy and risky jobs in the shop press are also minimized with this tool.

Rec. cylinder 01-00030.

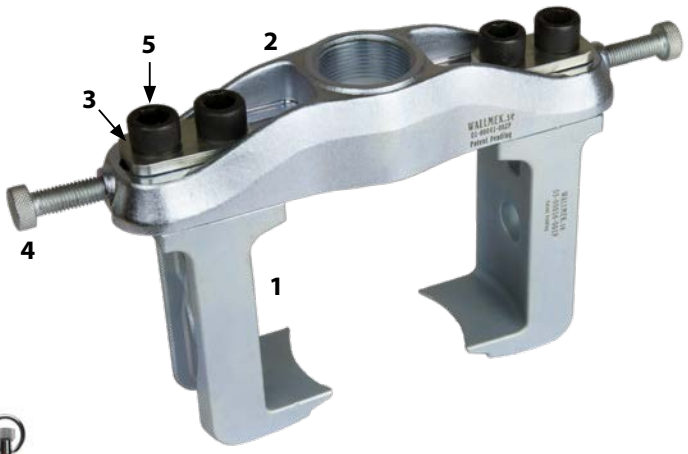

03-00036-020

EU Patent No. EP 3168007
EU Protected Design - RCD No. 003477090-0001/0002
EU Patent No. EP3323553
US Patent No. US 10.532.450
US Design Patent No. US D850.226

Contains these parts:

1. 2 pcs 03-00036-001 - Press foot
3. 01-00041-002 Fixing plate 1 ½" thread
4. 2 pcs 01-00041-003 - Sliding plate
5. 2 pcs 01-00018-004 - Screw
6. 4 pcs 01-00041-005 - Screw M14×45 10.9, hex

"It takes longer to walk to the job than to do the job with these tools."
-Bruno Cella, Cella Auto Repair.
Bolton, Ontario, Canada.

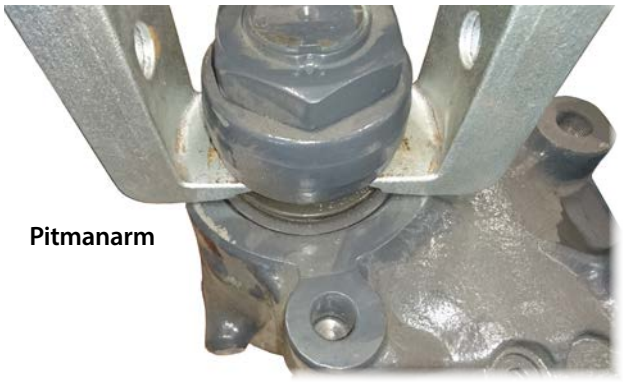

Pitmanarm

Support bearing

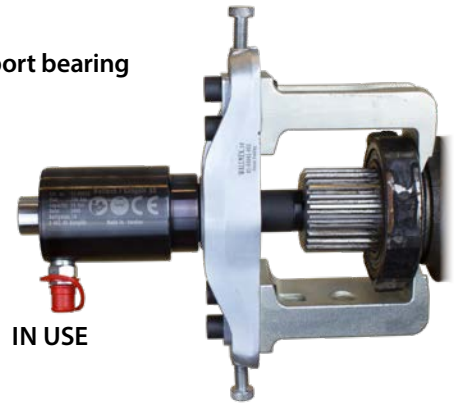

IN USE

03-00035-300 Set with 03-00035 and 03-00036-020

For efficient dismounting of flanges and supporting bearing on propeller shafts and dismounting of pitman arms on steering gears.

The set are delivered in a foam for practical storage.

Only foam; 04-00022-016.

01-00003 Universal press tool set 3

A flexible, well thought-out and very useful set for bushings and Kingpin bearings. The set consists of 24 pc, with sizes ranging from 30,5 to 79,7 mm with small increments. Many of them have two usable sides to increase the number of combinations to 61!
An adaptor and a press rod are included to be able to use press block 1090-60. This is very useful when working with bushings and ball-joints without holes. The set is delivered like in the picture with a foam that holds the pieces in place, dimensions: 415x290mm.

This set also contains five different press lids to cover the sizes of the press pipe. The snap ring in each press lid holds the press pipe in place. This makes the job with bushings a lot easier. The lids can be used with pulling rods in combination with the press pipes. They can also be used in a press frame with the press axle that are included in universal set 01-00001.

The set can be used in press the frame 1090-69 or with pulling rod M10, M12 and M14, or directly in the shop press.

01-00001 Universal press tool set 1: Tool set with only the adapterplate, the adjustable press axle, the press sockets and press pipes.

Universal set 3

01-00001-001 – Adaptor plate
01-00001-002 – Adjustable press axle 90mm,M2
01-00001-401 Presslock 45 mm
01-00001-402 Presslock 55 mm
01-00001-403 Presslock 70 mm
01-00001-404 Presslock 76 mm
01-00001-405 Presslock 80 mm

Press socket art:	Ø A mm	Ø B mm	Ø C mm
01-00001-101	40,7	42,5	35,2
01-00001-102	43,7	45,5	38,2
01-00001-103	46,7	48,5	41,2
01-00001-104	49,7	51,5	44,2
01-00001-105	52,7	54,5	47,2
01-00001-106	55,7	57,5	50,2
01-00001-107	58,7	69,5	53,2
01-00001-108	61,7	63,5	56,2
01-00001-109	65,7	67,5	60,2
01-00001-110	69,7	71,5	64,2

Press pipe art:	Ø A mm	Ø B mm	Ø C mm
01-00001-201	38,7	44,7	30,5
01-00001-202	41,7	44,7	34
01-00001-203	44,7	44,7	37,2
01-00001-204	47,7	55	40,2
01-00001-205	50,7	55	43,2
01-00001-206	53,7	55	46,2
01-00001-207	56,7	55	49,2
01-00001-208	59,7	70	52,2
01-00001-209	62,7	70	55,2
01-00001-210	65,7	70	58,2
01-00001-211	68,7	70	61,2
01-00001-212	71,7	70	64,2
01-00001-213	75,7	75,7	68,2
01-00001-214	79,7	79,7	72,2

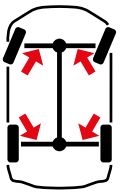

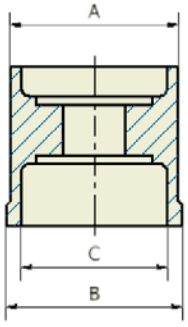

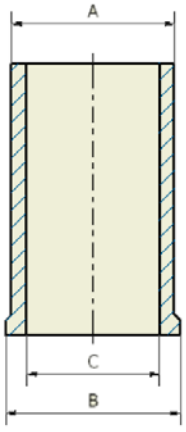

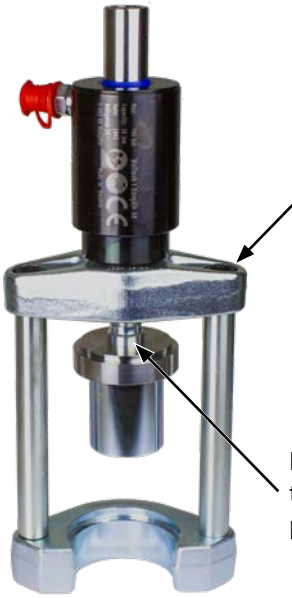

Press axle 01-00001-002 locks in to the press lid. The lid locks on to the press tube, easy and simple to use.

When used with a pulling rod the lid is used as a stop for the nut. The press tube is locked in the lid for easy operation. Can be used with pulling rods with size M10, M12 and M14.

03-00023 U Joint tool

Basic tool for quick and easy replacement of U-joints on trucks and buses. The job is done directly on the vehicle instead of heavy lifting and handling in the garage press. No need to send away these jobs. The tool saves a lot of time and improves the working environment. Adaptor set are ordered separately.
Used with 8,5 ton cylinder 03-00015 (not included).

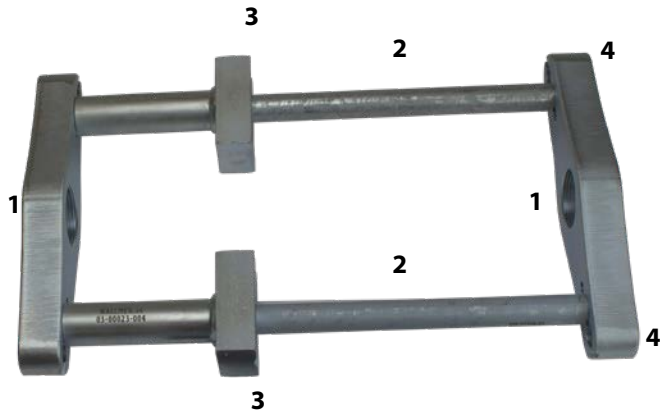

IN USE

Contains these parts:
1. 2 pcs 03-00023-002 - Plate
2. 2 pcs 03-00023-003 - Rod
3. 2 pcs 03-00023-004 - Anvil
4. 4 pcs 1090-60-04 - Bolt M16x40

03-00023-050 Adaptor set for Scania U Joints

This set is designed to fit all Scania U-joints and axles; 300, 400, 500 and 600.
The job can be done with the axle partly still installed on the vehicle.
The set is used with the basic tool 03-00023 and 8,5T cylinder 03-00015.

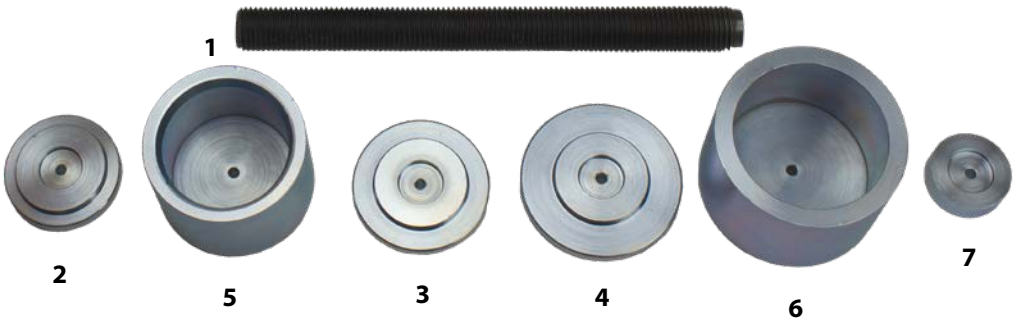

Contains these parts:
1. 03-00023-005 - Press axle
2. 03-00023-006 - Plate Ø47 mm
3. 03-00023-007 - Plate Ø55 mm
4. 03-00023-008 - Plate Ø65 mm
5. 03-00023-009 - Socket Ø58 mm
6. 03-00023-010 - Socket Ø68 mm
7. 03-00023-013 - Plate Ø37 mm
8. 03-00023-014 - Set of spacers

Hydraulic cylinders

03-00026 Hydraulic cylinder 45 ton

45 ton pressing and pulling cylinder. Designed for everyday use in auto repair shops. Primarily for use with our hub dismantling and King Pin tools 03-00016-45T, 03-00031-45T, 03-00022, 03-00027 etc.
The hydraulic cylinder's pressure can be combined with punching force when using punching socket 03-00026-006. Weight: 11,7 kg.
Stroke: 70 mm. **Automatic return.**

Contains these parts:
1. 03-00026-001 - Hydraulic cylinder 45 ton
2. 03-00026-012 - Adjustable press rod M30.145 mm
3. RES1090-05-04 - Thread protection cap (2½")
4. RES4035 - Flange nut M27
5. RES4036 - Carriage beam M27. 330 mm
6. RES4306 - Hydraulic quick coupling, male
7. 03-00026-006 - Punching socket M27

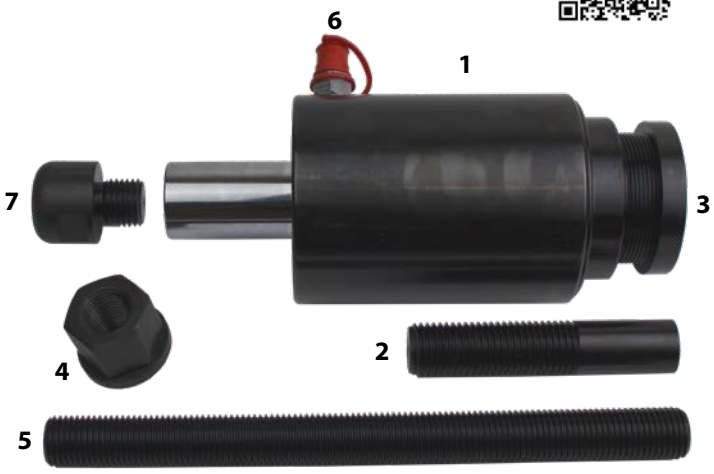

03-00028 Hydraulic cylinder 32 ton

32 tons pressing and pulling hydraulic cylinder. Designed for everyday use in auto repair shops. Primarily for use with our wheel bearing tools for light commercial vehicles and trucks. Can be used with carriage beams M10-M22 with the proper adaptor. The cylinder´s hydraulic pressure can be combined with punching force when using punching socket 1086-6 or punching nut 1091-17-M22. Weight: 8,2 kg. Stroke: 112 mm.
Automatic return.

Contains these parts:
1. 03-00028-001 - Hydraulic cylinder 32 ton
2. RES 1090-05-02 - Adjustable press rod 109mm, M24
3. RES 1090-05-04 - Thread protection cap (2½")
4. RES4025 - Flange nut M22
5. RES4027 - Carriage beam M22, 250mm
6. 1091-17 - Punching nut M22
7. 1086-6 - Punching socket M22
8. RES4306 - Hydraulic quick coupling, male

1090-02-WAL Hydraulic cylinder 22 ton

22 tons pressing and pulling hydraulic cylinder in a compact size with automatic return of piston. Designed for everyday use in auto repair shops. Can be used with all of our passenger car tools and carriage beams M10-M22 with the proper adaptor. The cylinder´s hydraulic pressure can be combined with punching force when using the punching socket 1086-6. For example when pressing a rusted axle shaft.
Weight: 4,7 kg. Stroke: 70 mm. **Automatic return.**

Contains these parts:
1. 1-1090-02 - Hydraulic cylinder 22 ton
2. 1086-6 - Punching socket M22x2,5
3. RES 1090-01-09 - Press plate M24x3
4. RES 1090-01-10 - Adjustable press rod 100mm, M24
5. 09-1090-01-11 - Thread protection cap (1½")
6. RES 1090-02-04 - Press axle 151mm, M24x3
7. RES 1090-05-02 - Adjustable press rod 109mm, M24
8. RES4024 - Flange nut M18
9. RES4026 - Carriage beam M18/M22, 250mm
10. RES4306 - Hydraulic quick coupling, male

01-00030 Hydraulic cylinder 18 ton

18 tons compact and light hydraulic cylinder, with pressing and pulling action and self returning piston.
Designed for everyday use in auto repair shops.
Can be used with all of our passenger car tools and carriage beams M10-M22 with the proper adaptor.

The cylinder´s hydraulic pressure can be combined with punching force when using the punching socket 1086-6. For example when pressing a rusted axle shaft. Weight: 2,8 kg. Stroke: 50 mm. **Automatic return.**

EU Patent No. EP 3156179
US Patent No. US 10.047.772

Contains these parts:
1. 01-00030-001 - Hydraulic cylinder 18 ton
2. Res 4306 - Hydraulic quick coupling
3. Res 4026 - Carriage beam M18/M22, 250mm
4. Res 1090-01-09 - Press plate M24x3
5. Res 4024 - Flange nut M18
6. 1086-6 - Punching socket M22x2,5
7. Res 1090-01-10 - Adjustable press rod 100mm, M24
8. Res 1090-01-12 - Adjustable press rod 132mm, M24
9. 01-00030-005 - Press rod
10. 09-1090-01-11 – Thread protection cap (1½")

1090-03 Hydraulic cylinder 14 ton

14 tons pressing hydraulic cylinder in a very compact size. Designed for everyday use in auto repair shops. Specially designed to use with press blocks 1090-55-B, 1090-60 and 1090-69. Weight: 2,5 kg. Stroke: 55 mm.
Automatic return.

Contains these parts:
1. 1-1090-03 - Hydraulic cylinder 14 ton
2. RES 1090-01-10 - Adjustable press rod 100mm, M24
3. RES4306 - Hydraulic quick coupling, male

03-00015 Hydraulic cylinder 8,5 ton

A very compact cylinder for pressing and pulling. The cylinder comes with an adjustable press rod and a punching socket. This cylinder is very flexible and easy to use also in tight spaces. Specially designed to be used with 03-00014-001 and 03-00005-001. Weight: 1,8 kg. Stroke: 25 mm. **Automatic return.**

Contains these parts:
1. 03-00015-001 - Hydraulic cylinder 8,5 ton
2. 03-00015-006 - Punching socket with o-ring
3. 03-00015-012 - Adjustable press rod 100mm, M22 x 2,5
4. RES4305 - Hydraulic quick coupling, male, 1/8"

03-00015-020 Press foot M22

Fits the press side of the 8,5 Ton hydraulic cylinder 03-00015.
The press plate can be used instead of the adjustable press axle delivered with the cylinder.

WALLMEK
i Kungälv AB

Accessories for Hydraulic cylinders

01-00031 Punching nut M18

When punching force is needed for pulling with our hydraulic cylinders. Useful for hubs and wheel bearing removal. Also used with the manual carriage beam 01-00020. Depending on hammer size, the extra force is similar as 2,5 – 3,5 times more power than the cylinder power itself.

1086-6 Punching socket M22

To be used on the piston side of the cylinder when pressing out axle shafts etc. The punching socket allows striking by a hammer in the cylinders press direction. Depending on hammer size, the extra force is similar as 2,5 – 3,5 times more power than the cylinder power itself.

RES4031

Carriage beam M22/M24. A specially designed adaptor for pulling out the bolts in digging and lifting arms. The beam can be used with the following cylinders; 01-00030/1090-02-WAL/03-00028.

04-00021 Cylinder holder Ø65-100 mm

Developed for use with the following cylinders; 1090-02-WAL, 1090-03 and 03-00028/ 01-00030. The holder is designed for use on the cylinders with hand held use and for use on a floor stand or gear box lift. Adjusting and locking of the cylinder is very easy and flexible for simple use. Also other cylinder brands and types from Ø65 – 100 mm can be mounted in the holder.

Fits gearbox lift and floor stands with axles measuring from 25 - 30 mm.

Contains these parts:
04-00021-001 - Holder without clamps
04-00021-013 - Clamp Ø70 mm
04-00021-014 - Clamp Ø85 mm
04-00021-015 - Clamp Ø100 mm

Use with cylinder:
1090-01 (16 T)
1090-02 (22 T)
1090-03 (14 T)
03-00028 (32 T)
01-00030 (18 T)

Hand held

Gearbox lift and floor stand

Adaptors for other tool systems

1. **1068-04** Adaptor 1 ½" to 2 ¼" – 14UNS (Klann thread)
2. **1068-05** Adaptor 1 ½" to G2 ½" – 11 (16 and 22 ton cylinder - 32 tons cylinder thread)
3. **1068-06** Adaptor 2 ¼" – 14UNS (Klann thread) to 1 ½"
4. **1068-07** Adaptor 1 ½" to M55x1,5 (Volvo thread)
5. **1068-08** Adaptor 1 ½" to M68x2 (Paschke thread)
6. **1068-09** Adaptor M68x2 (Paschke thread) to 1 ½"
7. **1068-10** Adaptor 2 ¾" – 16UNS G2 ½" (Klann thread) to 2 ½"
8. **1068-11** Adaptor 2 ¾" – 16UNS G1 ½" (Klann thread) to 1 ½"

1090-32 Carriage beam, flange nut & adaptor set

Set of carriage beams, flange nuts and adaptors.

Contains these parts:

1090-32–10

RES4014
Carriage beam M10, 150 mm in 12.9 quality.

1090-32–12

RES4015
Carriage beam M12, 250 mm in 12.9 quality.

1090-32–14

RES4016
Carriage beam M14, 250 mm in 12.9 quality.

1090-32–18

RES4026
Carriage beam M18/M22, 250mm in 12.9 quality.

1090-32–22

RES4027
Carriage beam M22, 250mm in 12.9 quality.

RES4012
Adaptor M22 → M10

RES4011
Adaptor M22 → M12

RES4010
Adaptor M22 → M14

RES4023
Flange nut M10

RES4022
Flange nut M12

RES4021
Flange nut M14

RES4024
Flange nut M18

RES4025
Flange nut M22

RES4036
Carriage beam M27, 330 mm in 10.9 quality.

RES4035
Flange nut M27

RES4037
Carriage beam M27, 500 mm in 10.9 quality.

RES4008
Adaptor M27 → M24

RES4039
Adaptor M27→ M22

RES4009
Adaptor M22 → M18

04-00008-001 Carriage beam M10, 1000 mm

Produced in 12.9 Quality, also available for order in 500mm lengths.

04-00008-002 Carriage beam M12, 1000 mm

Produced in 12.9 Quality, also available for order in 500mm lengths.

04-00008-003 Carriage beam M14, 1000 mm

Produced in 12.9 Quality, also available for order in 500mm lengths.

04-00008-004 Carriage beam M22, 1000 mm

Produced in 12.9 Quality, also available for order in 500mm lengths.

04-00008-005 Carriage beam M18, 1000 mm

Produced in 12.9 Quality, also available for order in 500mm lengths.

04-00008-007 Carriage beam M27, 1000 mm

Produced in 10.9 Quality, also available for order in 500mm lengths.

Hydraulic pumps

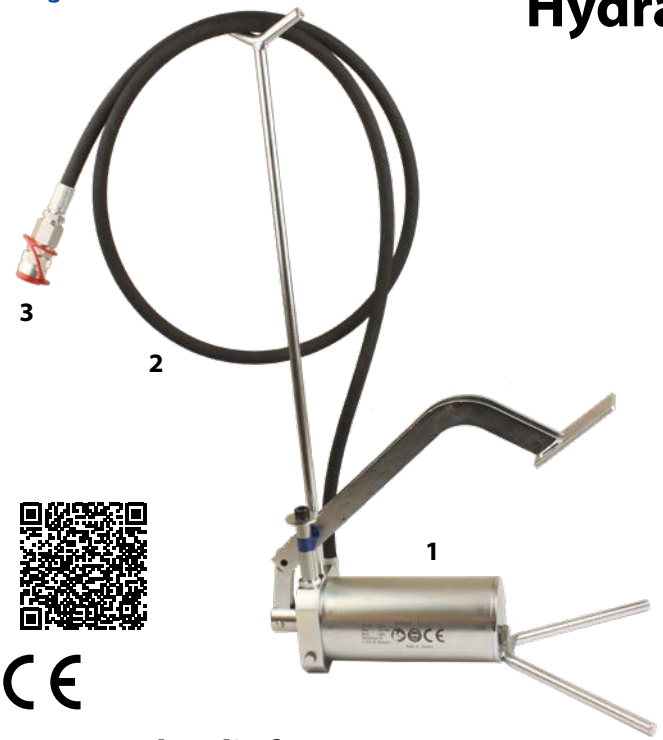

1030 Hydraulic foot pump

Hydraulic foot pump 700 bar for use with all our hydraulic cylinders. 2,2 m hose and drip-free quick coupling.
Oil tank volume 0,75 litres.

Contains these parts:
1. 1-1030 - Hydraulic foot pump
2. RES 1030-02 - Hydraulic hose for 1030, 1035 & 1036
3. RES4304 - Hydraulic quick coupling, female

1036 Pneumatic, variable hydraulic pump

Pneumatic driven hydraulic pump with variable speed for better control. Max pressure 700 bar for use with all our hydraulic cylinders. The pump is delivered with a pressure gauge and 2,2 m hose and drip-free quick coupling. Oil tank volume 1,3 litres.

Contains these parts:
1. 1-1036 - Pneumatic, variable hydraulic pump
2. RES 1030-02 - Hydraulic hose for 1030, 1035 & 1036
3. RES4304 - Hydraulic quick coupling, female

04-00020 Hydraulic oil 1 L

High quality hydraulic oil, optimal for Wallmek's hydraulic tools and pumps. Regular hydraulic oil change and correct volume increases the operation time of the components.

04-00016 Pressure gauge set for hydraulic pumps 1030 and 1035

Complete kit with coupling and nipple for connection directly to any Wallmek hydraulic pumps. The hydraulic cylinders manual includes a chart that shows the maximum oil pressure in bars for each different carriage beam.

04-00015 Safety cover with catch strap

Additional item for hydraulic operation directly on the car. Prevents damage if parts brakes or falls down.

ARRIVING 2022

03-00050 Universal set for master track pins

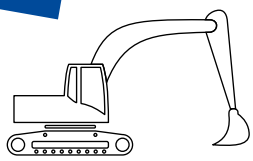

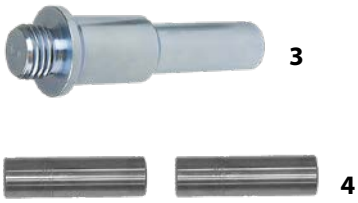

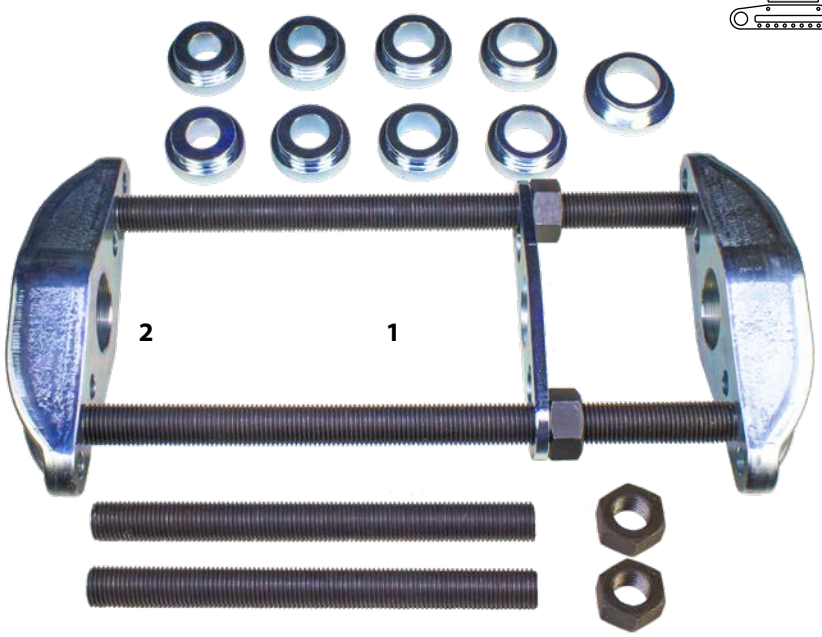

Contains these parts:
1. 03-00050-100
2. 2 pcs 03-00031-002 - Plate with thread
3. 03-00032-101 - Pressaxle L = 137 mm
4. 2 pcs 03-00032-102 Extender L = 64 mm
5. 03-00032-001 - Pressaxle L = 30 mm
6. 03-00032-002 - Pressaxle L = 140 mm
7. 03-00032-003 - Extender L = 50 mm
8. 03-00032-004 - Extender L = 70 mm
9. 03-00032-005 - Extender L = 100 mm

This set is primarily developed for disassembly and assembly of master track pins. With our 45 T hydraulic cylinder 03-00026 and hammer function the effect on the pin will be a full 157 Ton during disassembly. The tool is clamped on to the track with the help of the fixing plate and the job can be performed by one mechanic without extra help. All parts are manageable in terms of weight and easy to mount on the machine. This makes the tool very portable and flexible for both the workshop and the field.
Internal dimensions of adapters for pins: Ø35, 39, 45.4, 48.2mm. **Recommended cylinder 03-00026, 45 Ton (not included).**

03-00050-100

To be used with 2 plates with thread 03-00031-002 and press axle set 03-00032-050

The Universal set is also available as an add-on set, which comes without the two forged threaded plates 03-00031-002 and press axle set.
Good upgrade for those who already have these extenders and pressaxles.
Reccommended cylinder 03-00026, 45 Ton (not included).

Contains these parts:
1. 2 pcs 03-00050-001 - Pressadapter, inside Ø35 mm
2. 2 pcs 03-00050-002 - Pressadapter, inside Ø39 mm
3. 2 pcs 03-00050-003 - Pressadapter, inside Ø45,4 mm
4. 2 pcs 03-00050-004 - Pressadapter, inside Ø48,2 mm
5. 03-00050-005 - Adapter
6. 03-00050-006 - Fixing plate
7. 03-00050-007 - Threaded support rod, L = 383 mm
8. 03-00050-008 - Threaded support rod, L = 557 mm
9. 4 pcs 09-000196 - Nut M36

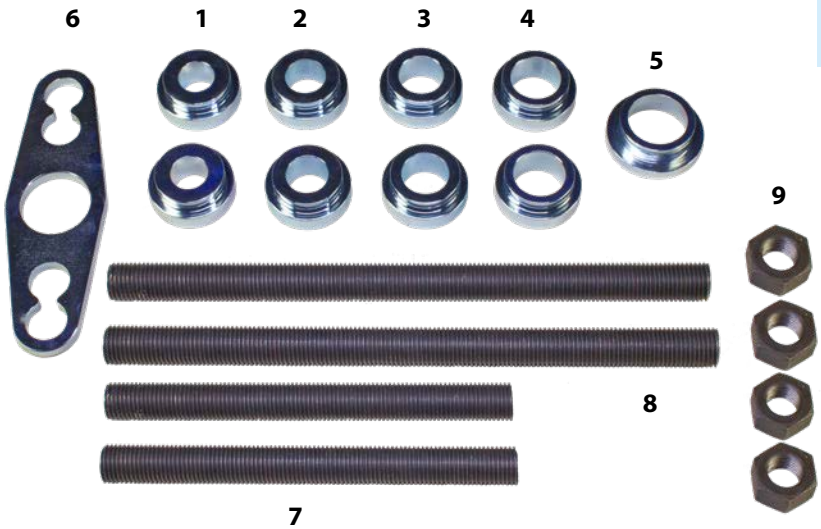

03-00021-020, 32T and 03-00021-021, 45T
Universal basic set for commercial truck and bus garages

Both these sets comes with tools for efficient jobs on straight and conic king-pins, bushings in springs, drawbars and large lock rings.
Dismounting tools for steering joints, wheel bolts, wheel hubs and slack adjusters.

03-00021-010, 32T
Contains these parts:

1. 03-00016-001 - Press foot for hub puller (2 pcs)
2. 03-00003-005 - Screw M22x60 12.9 hex (2 pcs)
3. 01-00004 - Lock ring tool
4. 04-00028 - Hydraulic ball joint puller
5. 03-00028 - Hydraulic cylinder 32 ton
6. 03-00006-013 - Press plate Ø 59 mm
7. 03-00006-014 - Press plate Ø 63 mm
8. 03-00006-015 - Press plate Ø 50 mm
9. 03-00006-016 - Press plate Ø 44 mm
10. 03-00006-017 - Press plate Ø 63 mm
11. 03-00006-018 - Press plate Ø 57 mm
12. 03-00006-021 - Press plate
13. RES4026 - Carriage beam M18/M22, 250mm
14. RES4024 - Flange nut M18
15. 03-00031-32T - Universal set for Kingpin

(32 T)

03-00021-020, 32T and 03-00021-021, 45T
Universal basic set for commercial truck and bus garages

Both these sets comes with tools for efficient jobs on straight and conic king-pins, drawbars and large lock rings.
Dismounting tools for steering joints, wheel bolts, wheel hubs and slack adjusters.

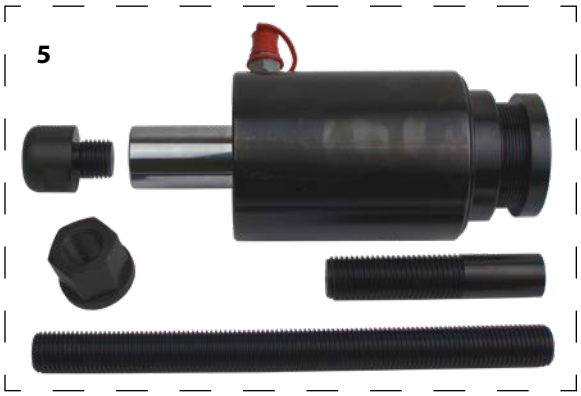

03-00021-011, 45T
Contains these parts:
1. 2 pcs 03-00016-001 - Press foot for hub puller
2. 2 pcs 03-00003-005 - Screw M22x60 12.9 hex
3. 01-00004 - Lock ring tool
4. 04-00028 - Hydraulic ball joint puller
5. 03-00026 - Hydraulic cylinder 45 ton
6. 03-00031-45T - Universal set for Kingpin

"A lot of jobs would be impossible without these tools, the speed is a huge bonus. Without Wallmek tools in the shop the productivity and efficiency would be lower, simply more hassle! "
-Kjell Andersson, Alvesta Bilservice AB Sweden

Storage

04-00022 Tool trolley with 9 drawers

Double tool trolley with totally 9 drawers developed for Wallmek toolsets and foams. The trolley is equipped with a large top drawer for cylinders and accessories.
All drawers are locked individually and with a central lock system for extra safety during transport, storage and normal use.
All drawers open fully with heavy duty ball bearing slides and can be loaded with 90 kg.

Internal measurements per drawer:

4 pc H100×W585×D418 mm
3 pc H150×W585×D418 mm
1 pc H250×W585×D418 mm
1 pc H100×W1243×D418 mm (top drawer)

See foames on pages 35 - 39

The large axle wheels in combination with four swiveled wheels make the trolley easy to handle fully loaded with tools.

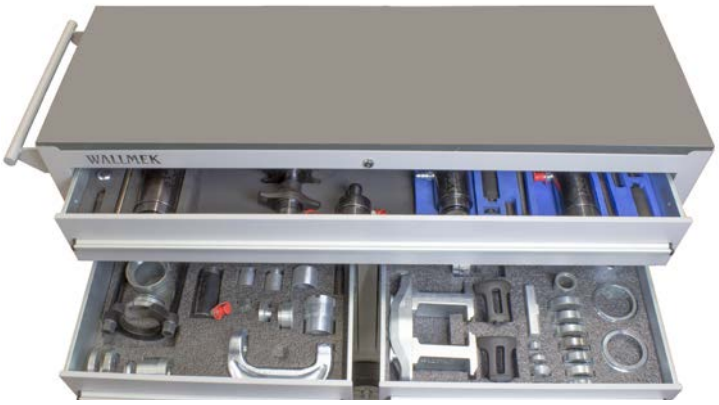

Large work surface.

Ball bearing slides for 90 kg load in each box!

Central lock for safe storage!

Foam for tool trolley 04-00022. Tools not included.

04-00022-012 Foam, dimensions 580x415x100

maximum height with tools: 100 mm

See alternatives:
04-00022-024
04-00022-025
04-00022-027

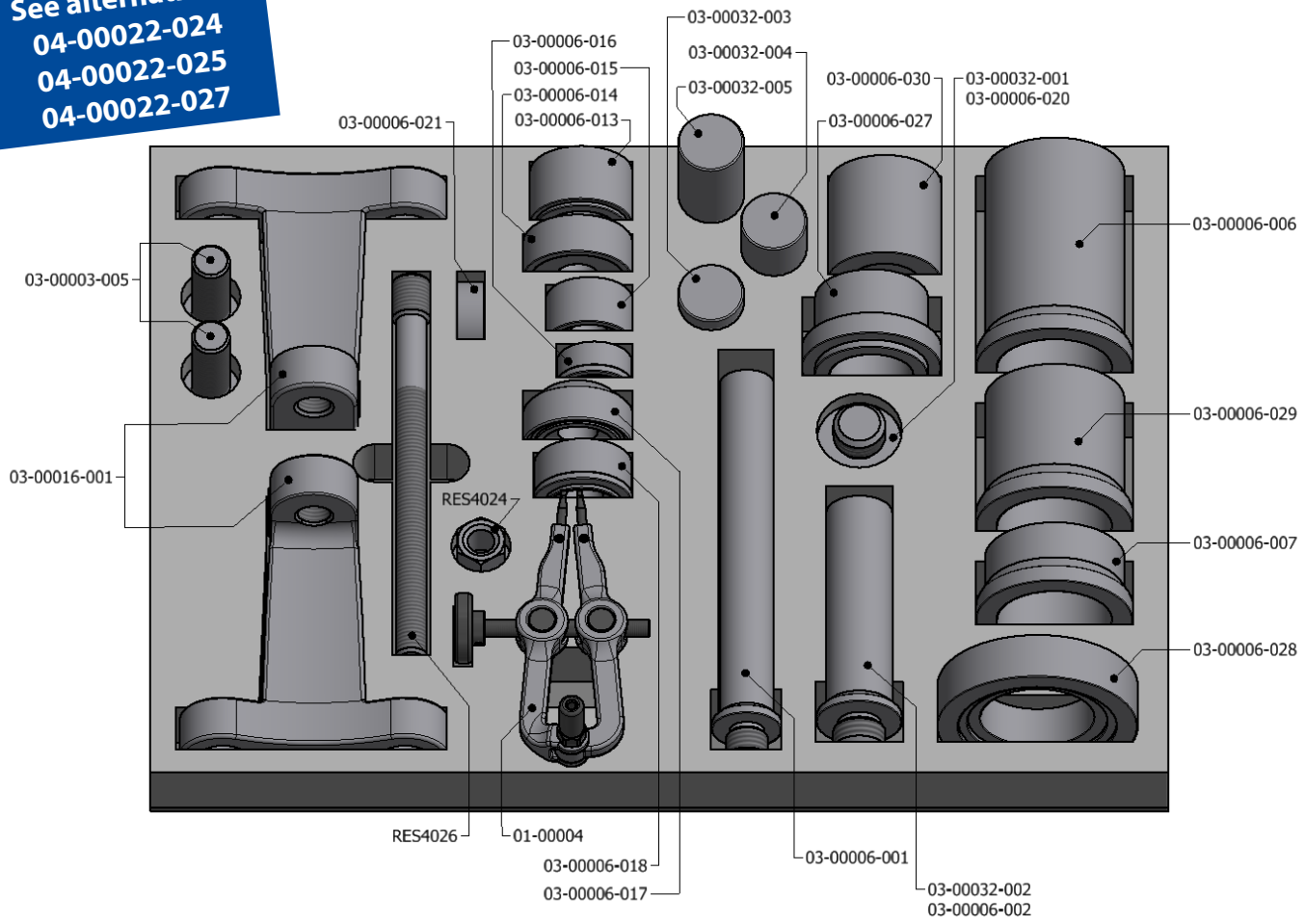

04-00022-013 Foam, dimensions 580x415x90

maximum height with tools: 90 mm

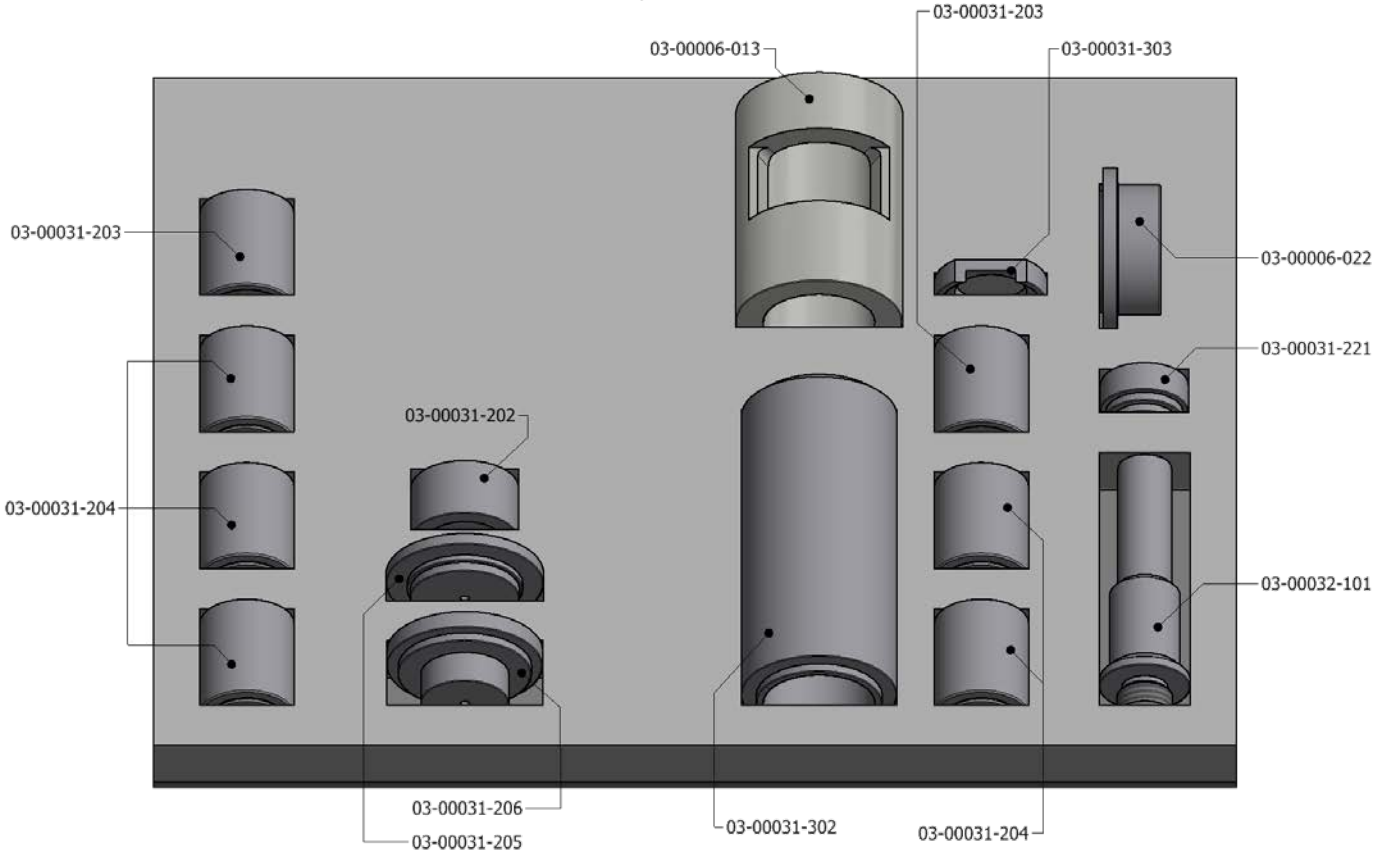

04-00022-016 Foam, dimensions 580×415×122

maximum height with tools: 125 mm

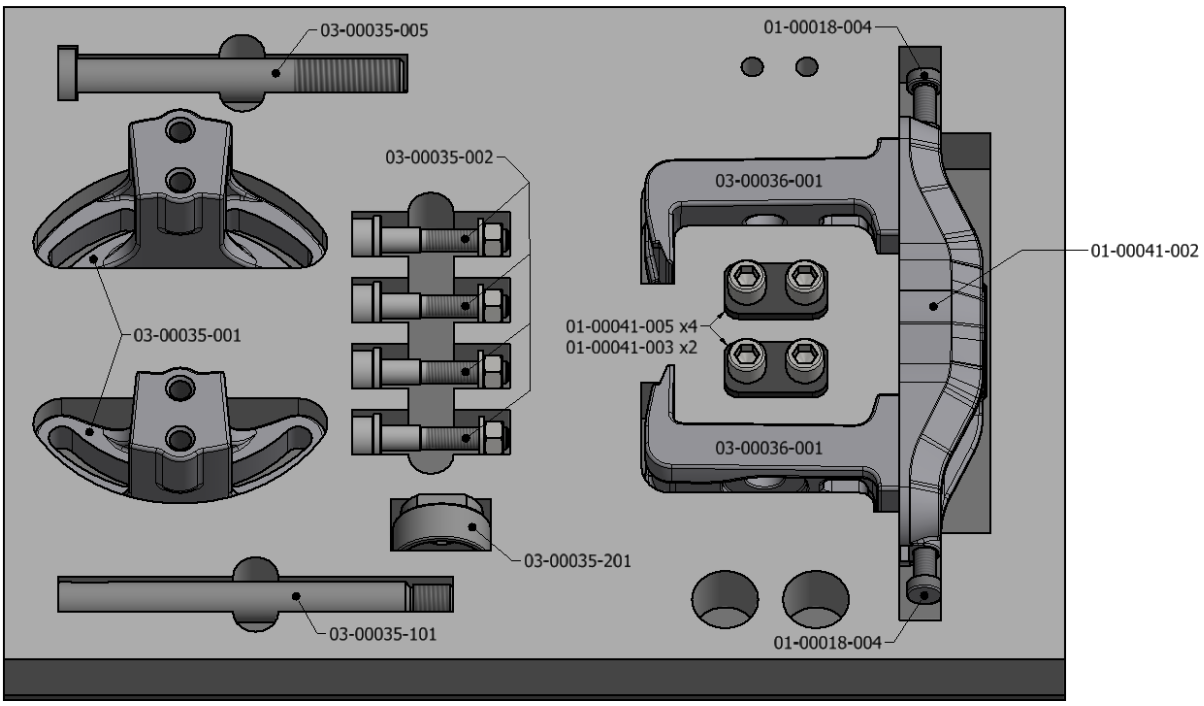

04-00022-024 Foam, dimensions 580x415x90

maximum height with tools: 100 mm

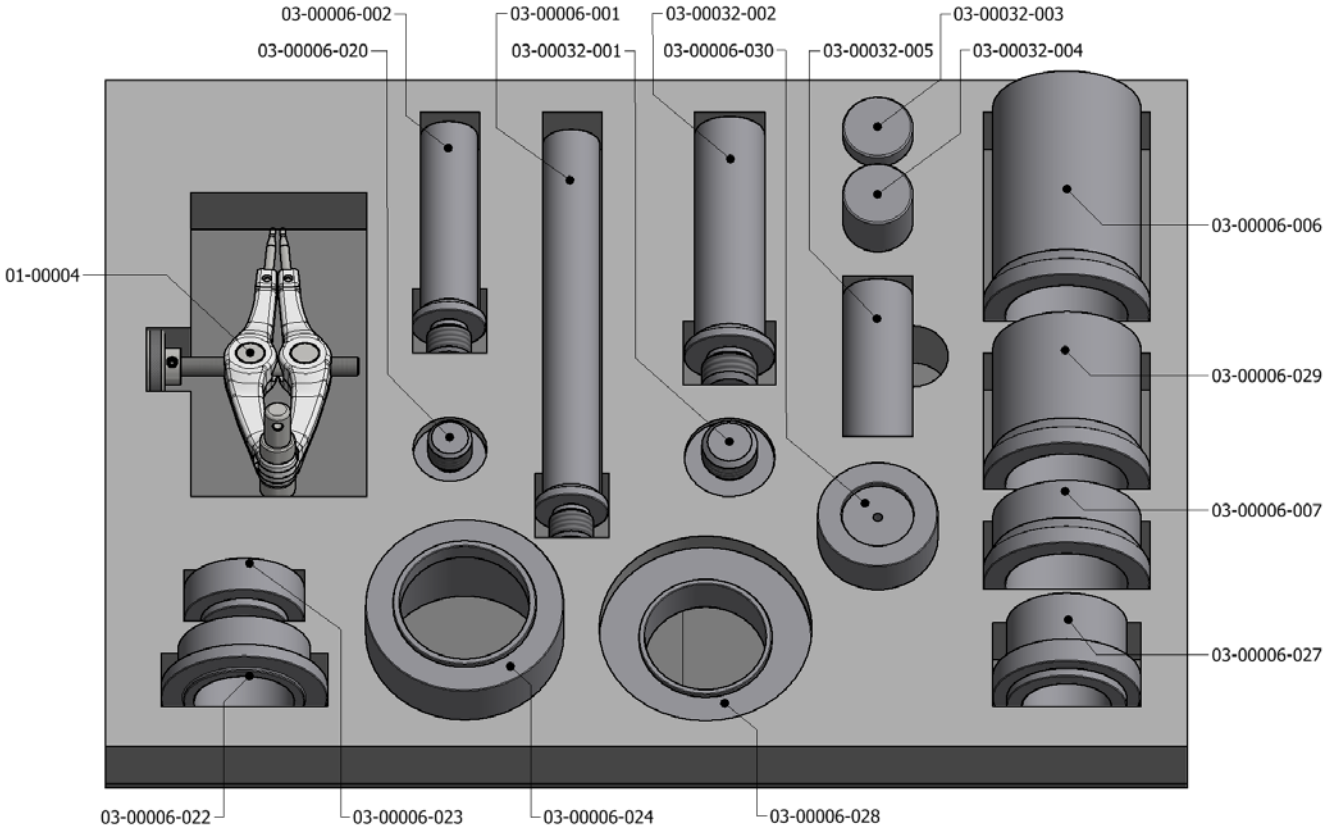

04-00022-025 Foam, dimensions 580×415×122

maximum height with tools: 120 mm

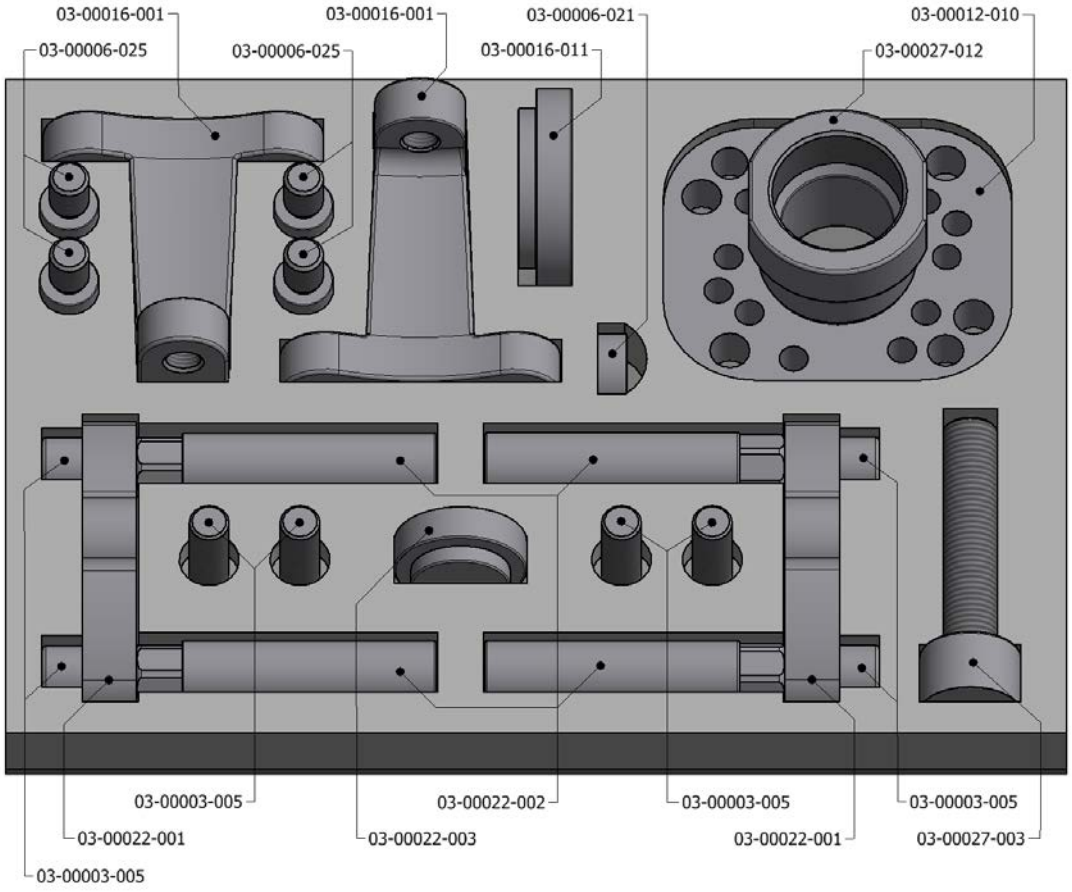

04-00022-026 Foam, dimensions 580x415x90

maximum height with tools: 150 mm

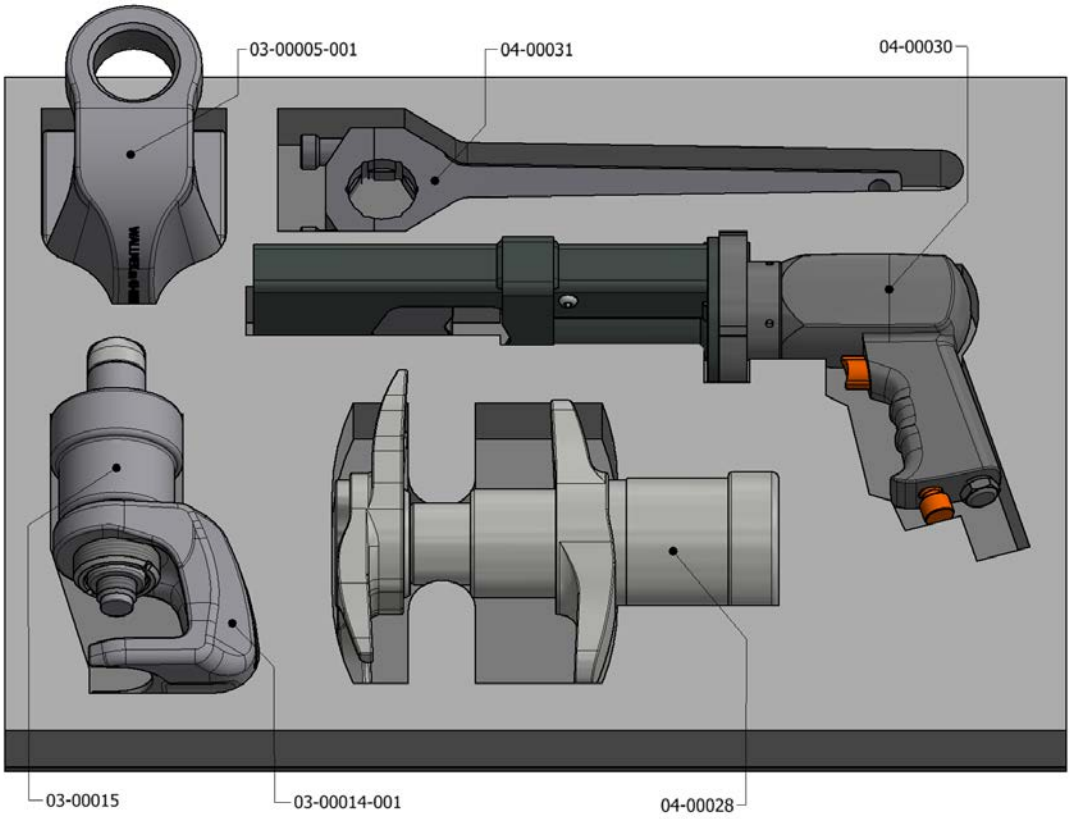

04-00022-027 Foam, dimensions 580×415×122

maximum height with tools: 210 mm

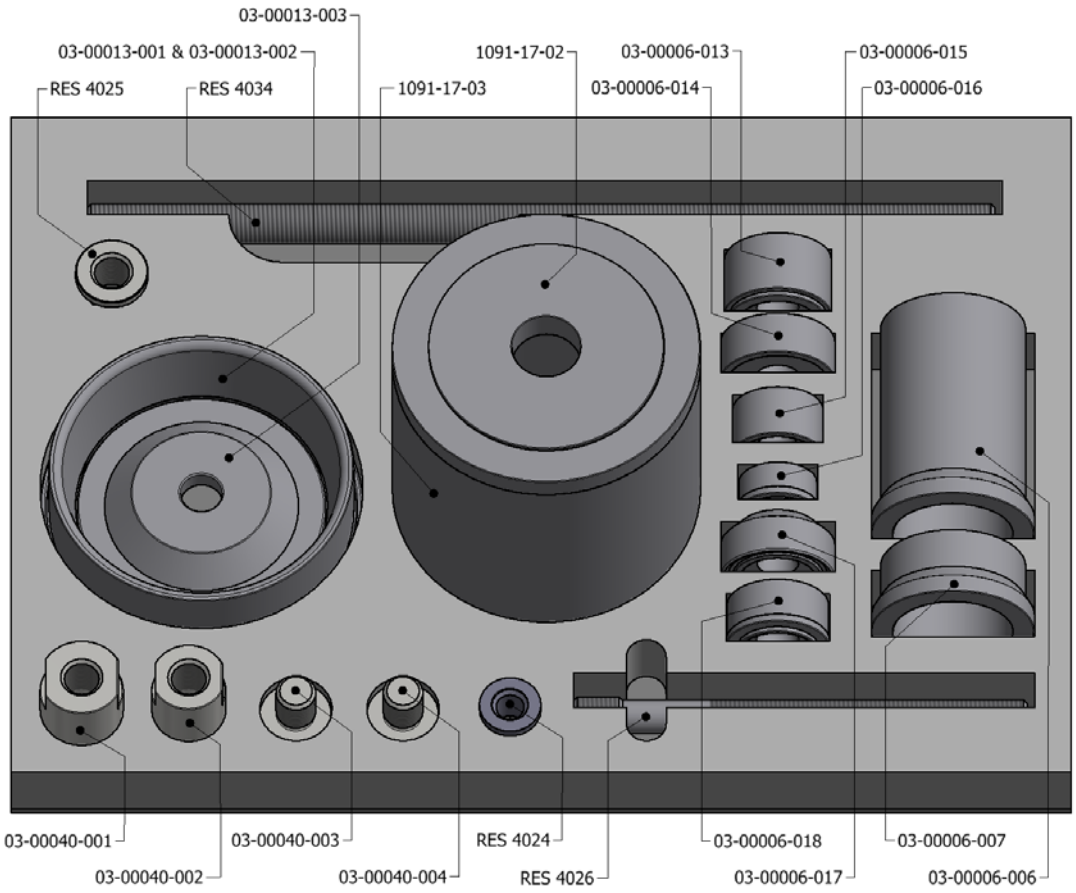

04-00022-028 Foam, dimensions 580x415x90

maximum height with tools: 120 mm

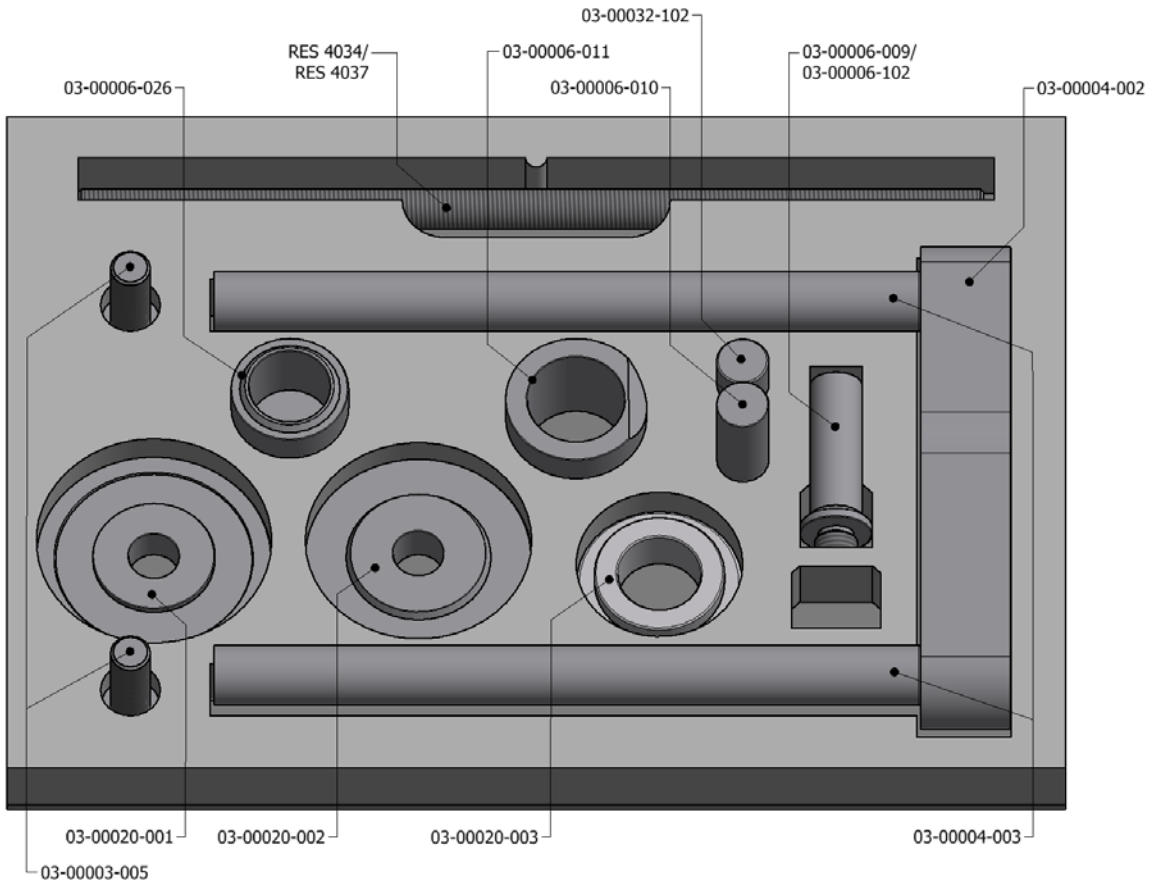

This tool and storage system is made for automotive and truck garages that wants to take the next step in efficiency and profit. The technicians can maximise their time getting the job done instead of trying to find the right tool for the job

1090-50 Tool cart

This sturdy tool cart comes with a large working surface. The large wheels makes it easy to transport even when fully loaded.

Three different shelf/hook sets is available: 1090-51, 1090-52 and 1090-53.

Tools not included.

1090-53 Tool holder for trucks.

04-00023 Stackable plastic tool box

A strong plastic stackable tool box for efficient storage of tools and cylinders. This solution is perfect for transporting Wallmek tools between different shop locations.

Foams to fit in the boxes are delivered with the following tools and sets; 01-00035, 01-00022, 01-00041, 01-00026, 01-00027, 01-00033 and 01-00037.

Outer dia; 464x335x212h mm.
Inner dia; 400x300x150h mm.

Fuel handeling for Petrol, Diesel and Ethanol (E85)

Supplied with classification plan and EC declaration regarding → CE Ex

L1050-E Fuel tank drainer 115L

This fuel tank drainer is made of stainless steel with a volume of 115 litres approved for petrol, diesel and ethanol. It uses vacuum when draining the car, and pressure when emptying the fuel drainer. It is delivered with a set of adaptors and a special hose for long and complicated fuel filler necks (No: L1063). The suction hose uses a quick coupling for a fast, easy and tight connection. The fuel drainer is equipped with an overfill protector, safety vent and pressure regulator. Large wheels makes it mobile and easy to move. SAQ Approval TO 194/92 – 175 950. The fuel drainer has a very long lifetime since it does not have any movable parts that can get damaged by fuel or particles. Safe, fast (max 15 l/ min) and quiet operation. Fumes are disposed of through an exhaust hose. Adaptors No: 1, 2 and 3 are included in No: L1050-E.

Comes with the drainer:

L1054-1	Fuel refill pipe
L1054-2	Suction adaptor, coned
L1063	Stainless steel hose with quick coupling for draining fuel through long, bent and complicated fuel tank filler necks with L1050 and L1050-E. Diameter: 12mm. Length: 1,9m. Suction capacity: 7 litres/min.

An efficient and safe way for handling fuel. This drainer has no moving pump, which ensures a long lifetime compared to mechanical devices.

05-00009 Fuel drainer for trucks and busses

630L

The fuel suction unit is intended, approved and EX classed for ethanol, diesel and petrol. It is equipped with 4 wheels but it can also be handled using a pallet lifter or a fork lifter. The fuel suction unit is made from stainless steel. Its capacity is 630 liters and it weighs 145 kg when empty. The fuel suction unit is powered by a pneumatic diaphragm pump that drains and fills with 20 lit/min. An overfill protection device automatically breaks the air supply to the pump if the fuel level in the fuel suction unit is too high.
The fuel suction unit is equipped with a bleed hose fitted with a flame guard, which is connected to the vehicle exhaust extraction system when draining vehicles to achieve odorless fuel handling.
The unit is supplied with three suction and filler adaptors.

1. L1054-1 Fuel refill 15 litres/min
2. 05-00009-002 Fuel hose ½", 3 m
3. 05-00009-003 Adaptor Tema 1800 – Parker NS

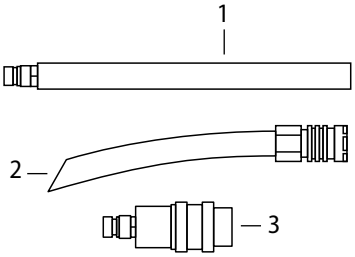

Supplied with classification plan and EC declaration regarding → CE Ex

L2015 Water seperator Pertrol, Diesel and Ethanol (E85)

Cleans petrol and diesel effectively from water and particles.
For mounting on fuel tank drainer no: L1050-E.
Easy inspection through sight glass.
Drains from bottom valve.
Volume: 3,5 litres.

Picture shows separator fitted on fuel tank drainer.

05-00001 Liquid indicator ½"

For mounting on the fuel tank drainer fuel hose. ½" pipe thread.

Productnumber Index

01-00003 24
01-00004 21
01-00030 27
01-00031 28
03-00005-001 17
03-00006-012 21
03-00006-022 9
03-00006-023 9
03-00006-024 9
03-00006-025 12
03-00006-031 10
03-00008-32T 15
03-00008-45T 15
03-00009 20
03-00010 20
03-00013 20
03-00015 27
03-00015-020 27
03-00016-011 13
03-00016-32T 12
03-00016-45T 12
03-00017 21
03-00020-32T 21
03-00020-45T 21
03-00021-020 32
03-00021-021 33
03-00022 13
03-00023 25
03-00023-050 25
03-00025 14
03-00026 26
03-00027-32T 13
03-00027-45T 13
03-00028 26
03-00030 17
03-00031-002 15
03-00031-32T 8
03-00031-45T 8
03-00031-050 9
03-00031-200 10
03-00031-220 9
03-00031-300 9
03-00034 14
03-00035 22
03-00035-101 22
03-00035-201 22
03-00035-300 23
03-00036 23
03-00037 18
03-00037-209 18
03-00038 19
03-00040-001 15
03-00040-002 15
03-00040-003 15
03-00040-004 15
03-00042 4
03-00050 31
03-00050-100 31
04-00008-001 29
04-00008-002 29
04-00008-003 29
04-00008-004 29
04-00008-005 29
04-00015 30
04-00016 30
04-00020 30
04-00021 28
04-00022 34
04-00022-012 35
04-00022-013 35
04-00022-016 36
04-00022-024 36
04-00022-025 37
04-00022-026 37
04-00022-027 38
04-00022-028 38
04-00023 39
04-00025 19
04-00028 16
04-00030 17
04-00031 17
05-00001 41
05-00009 40
1030 30
1036 30
1068-04 29
1068-05 29
1068-06 29
1068-07 29
1068-08 29
1068-09 29
1068-10 29
1068-11 29
1086-6 28
1090-02-WAL 26
1090-03 27
1090-32 29
1090-32-10 29
1090-32-12 29
1090-32-14 29
1090-32-18 29
1090-32-22 29
1090-50 39
1090-53 39
1090-60-10 24
L1050-E 40
L2015 41
RES4008 29
RES4009 29
RES4010 29
RES4011 29
RES4012 29
RES4014 29
RES4015 29
RES4016 29
RES4021 29
RES4022 29
RES4023 29
RES4024 29
RES4025 29
RES4026 29
RES4027 29
RES4031 28
RES4035 29
RES4036 29
RES4037 29
RES4039 29

Let us know your experience with our tools at info@wallmek.se!
See satisfied customer opinions below:

"It takes longer to walk to the job than to do the job with these tools."
-Bruno Cella, Cella Auto Repair.
Bolton, Ontario, Canada.

"A lot of jobs would be impossible without these tools, the speed is a huge bonus.
Without Wallmek tools in the shop the productivity and efficiency would be lower, simply more hassle! "
-Kjell Andersson, Alvesta Bilservice AB
Sweden

I just want to say that the rim popper for HD truck/trailer and bus are super-efficient….
Patrik Larsson, Grönnäs Autoservice
Sweden

An efficient tool that not just makes it simple to do the job, it's also a lot more fun.
Stefan Lundgren
Volvo Truck Center Helsingborg
Sweden

The Wallmek tools are frequently used in our shop, we get great help every time we use them.
We save a lot of time and effort with these tools, the support and service are very good every time we contact Wallmek.
Stefan Lundgren
Volvo Truck Center Helsingborg
Sweden

A fantastic tool that we couldn't be without. No more heavy jobs in the shop press or time-consuming cutting in the thick brake disc. These things ruin the work environment for everyone.
Ahmad Hassan
Volvo Truck Center Arlöv
Sweden

The tools from Wallmek are world class solutions, the same with the support we get.
Our staff are using the tools every day and they always work as promised. When we need new tools or maintain existing equipment, we always get quick help and service.
Why do things slow when it can be done so much faster?
Ahmad Hassan
Volvo Truck Center Arlöv
Sweden

Once you start using these tools and methods you will understand how insufficient you are without them. The tools are also easy to put in the service van when we head out on road jobs.
Our shop/garage adding all new tools from Wallmek, this save us a lot of time and the technicians are really satisfied.
Thomas Karlsson
Nimrod i Eslöv
Sweden

Without this equipment for kingpins, we normally spend 2 – 3 days doing this job.
The universal design makes it possible to do even other jobs more efficient.
Per Klasson
Fristads Expressbyrå,
Sweden

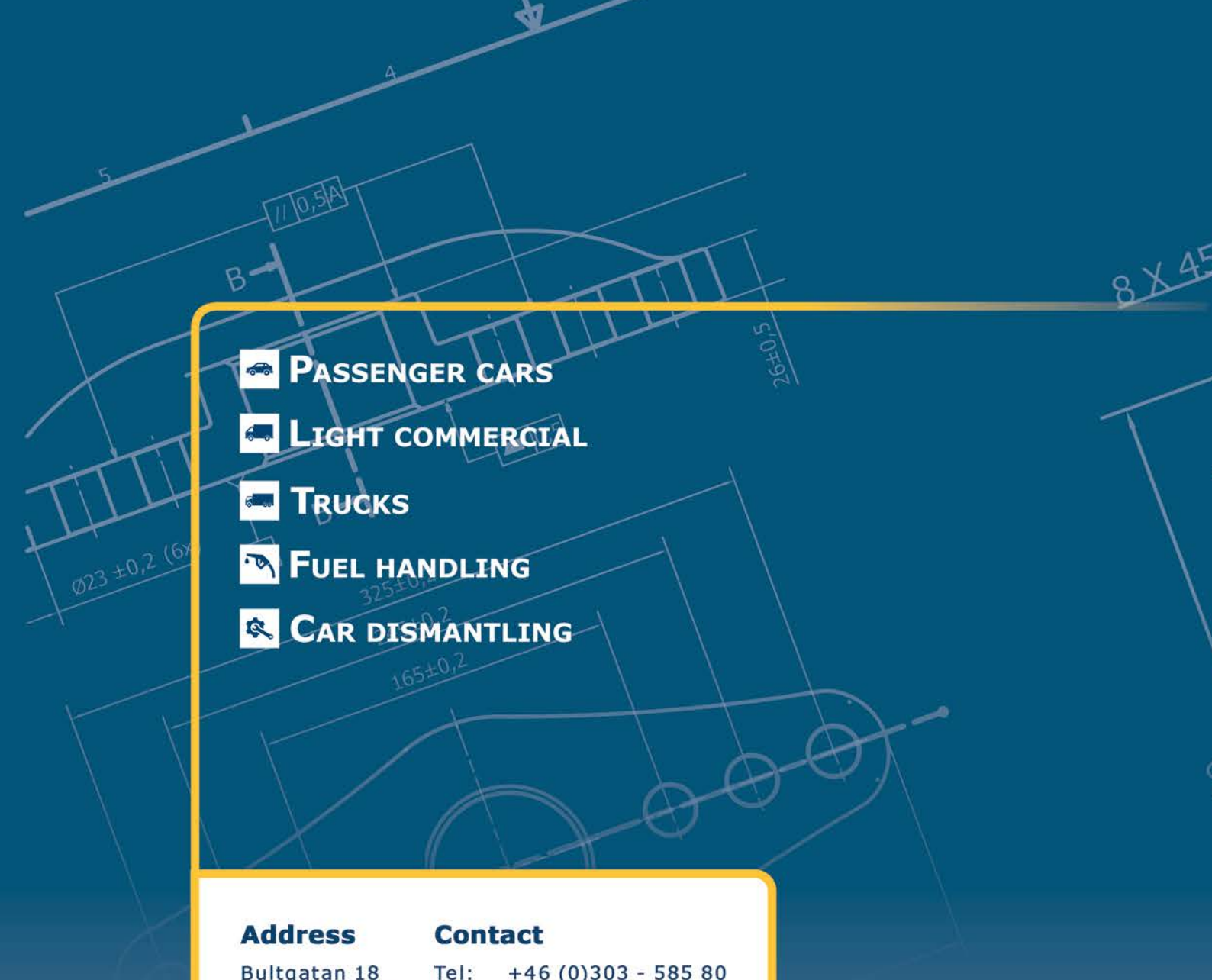

- PASSENGER CARS
- LIGHT COMMERCIAL
- TRUCKS
- FUEL HANDLING
- CAR DISMANTLING

Address

Bultgatan 18
442 40 Kungälv
Sweden

Contact

Tel: +46 (0)303 - 585 80
E-mail: info@wallmek.se

Retailer

www.wallmek.se